SLED® End Treatment System
Installation Procedure Manual

TrafFix Devices Inc.
Engineered Products for Safer Highways

MASH ✓
Manual for Assessing Safety Hardware
TESTED, PASSED AND ELIGIBLE





TrafFix Devices Inc.

160 Ave. La Pata
San Clemente, California 92673
(949) 361-5663
FAX (949) 361-9205
www.traffixdevices.com

PN 45045-03 Revision A (Dated 05/02/2019)

Table of Contents

IMPORTANT:

Read and understand ALL installation instructions before attempting to install the SLED® End Treatment System.

Page

Limitations and Warnings 1

Safety Precautions 2

System Overview 3

Product Overview and Function 4

SLED Identification and Orientation 5

Product Components and General Specifications 6

SLED Parts Check List 11

Directional Application Definition 13

Speed Configuration 14

Recommendations for Stacking 15

Water Freezing Prevention 16

Installing SLED Nose Sheeting 18

Tools and Equipment for Assembly and Installation 19

SLED End Treatment System Installation 20

Appendix A: SLED End Treatment System Specifications 32

Appendix B: FHWA Eligibility Letter 35

Appendix C: Regional Sales Managers, Key Contacts, and Customer Service 36

Notes 38

160 Ave. La Pata
San Clemente, California 92673
(949) 361-5663
FAX (949) 361-9205
www.traffixdevices.com

Limitations and Warnings

TrafFix Devices Inc., in compliance with the Manual for Assessing Safety Hardware (MASH) recommended procedures for safety performance evaluation of highway features, contracted the services of an approved ISO certified independent test facility, to conduct crash tests, report findings, and provide complete testing evaluation reports.

The SLED End Treatment System is deemed eligible by the Federal Highway Administration (FHWA) for use on the National Highway System. TL-3 meets the MASH requirements, using the test impact vehicles that range from light weight cars of approximately 1100 kg (2420 lbs.), to full-size pick up trucks of approximately 2270 kg (5000 lbs.).

A series of inline, offset, side and angle impacts at a designated speed of 100 kph (62.1 mph) were conducted to verify the SLED's impact performance. All Occupant Risk Values were deemed a PASS per MASH specifications.

The SLED End Treatment System is designed to be installed and maintained in accordance with the recommendations and guidelines of the governing state and FHWA.

After an impact, damaged components should be removed and replaced with new components.

Safety Precautions

CAUTION



Before handling any TrafFix Devices product always be sure to wear proper protective equipment including:



SAFETY EYEWEAR



HARDHAT



HEARING PROTECTION



STEEL TOE BOOTS



SAFETY VEST



GLOVES

System Overview

The SLED End Treatment System is a gating, non-redirective crash cushion designed to shield the end of concrete, steel, or plastic barriers.

Crash Performance

The SLED End Treatment Modules are yellow in color. The MASH Test Level 3 (TL-3) System has an overall length of 25.25 ft. (7.7 m) long (pin to pin) and is 2.3 ft. (0.7 m) wide. Each Module has overall dimensions of approximately 6.3 ft. (1.9 m) x 1.9 ft. (0.57 m) x 3.8 ft. (1.2 m) and weighs approximately 160 lbs. (73 kg) when empty and 2000 lbs. (907 kg) when filled.

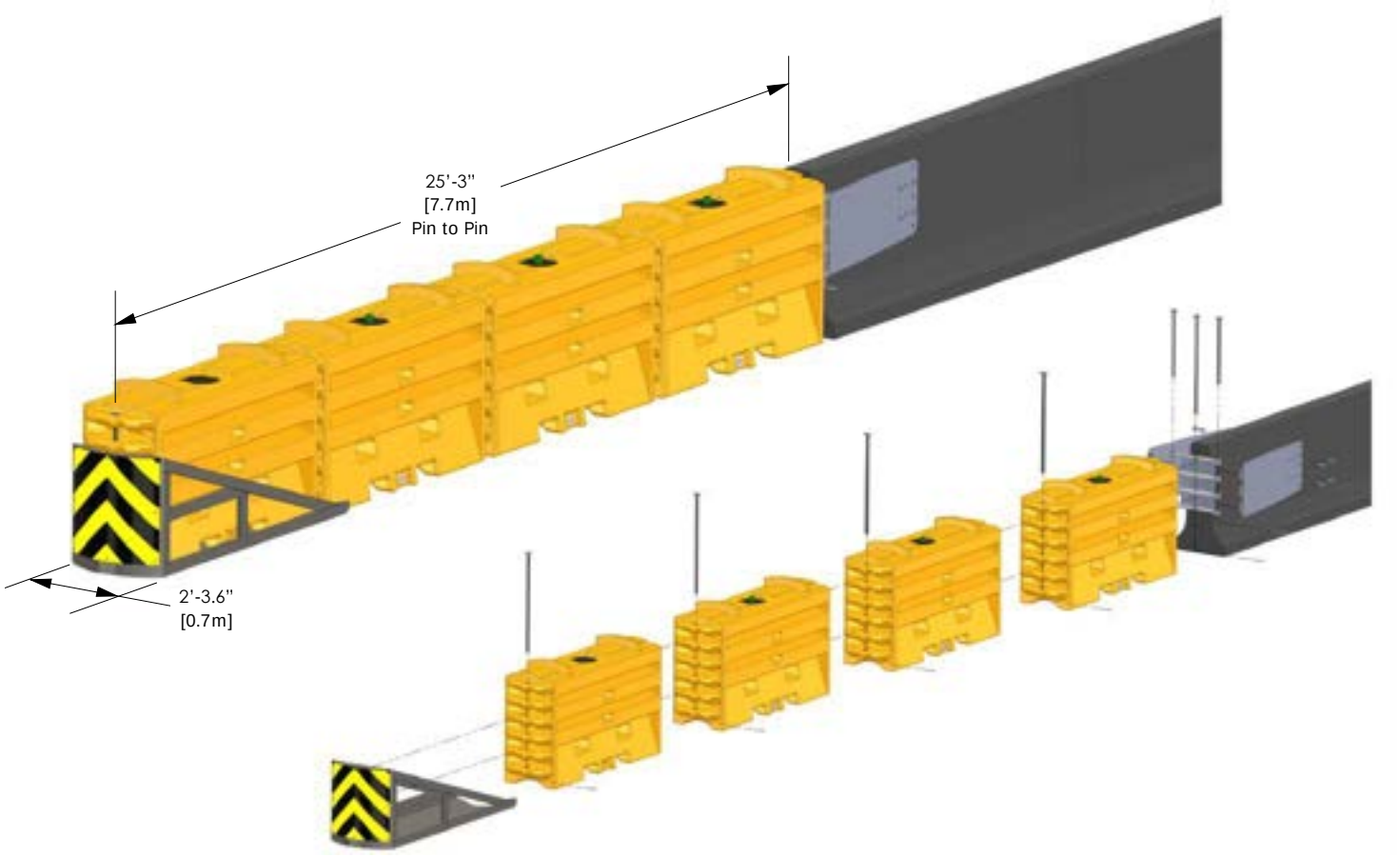

Figure 1: TrafFix Devices SLED End Treatment System shown in TL-3 configuration.

Product Overview and Function

The SLED End Treatment System is a water filled gating non-redirective crash cushion designed to shield permanent and portable barriers. The SLED End Treatment System consists of three water filled and one empty plastic modules to produce the desired energy attenuation characteristics to decelerate an impacting vehicle to meet TL-3 crashworthy requirements of MASH. Attached to the front empty module is the patented Containment Impact Sled (CIS) which collects the ruptured debris in front of the impacting vehicle.

Additional Features:

- MASH TL-3 Tested – Eligible for use on the National Highway System as a TL-3, Crash Cushion.
- Overall TL-3 array length is 25.25 ft (7.7m) long (pin to pin).
- Attaches to various barrier shapes made of concrete, steel, or plastic.
- Does not require any external steel for module assembly.
- Rotational molded plastic, modules are manufactured from specially formed material designed to be durable when handled and attenuate when impacted.
- Module sections up to ½" (14 mm) thick reduce nuisance hit damage and the potential for vandalism.

SLED Identification and Orientation

Figure 2 identifies the TL-2 SLED End Treatment Systems front and rear orientation for installation. Figure 3 identifies the TL-3 SLED End Treatment Systems front and rear orientation for installation. The Containment Impact Sled orients the front. Module #1 attached to the shielded barrier orients to the rear.

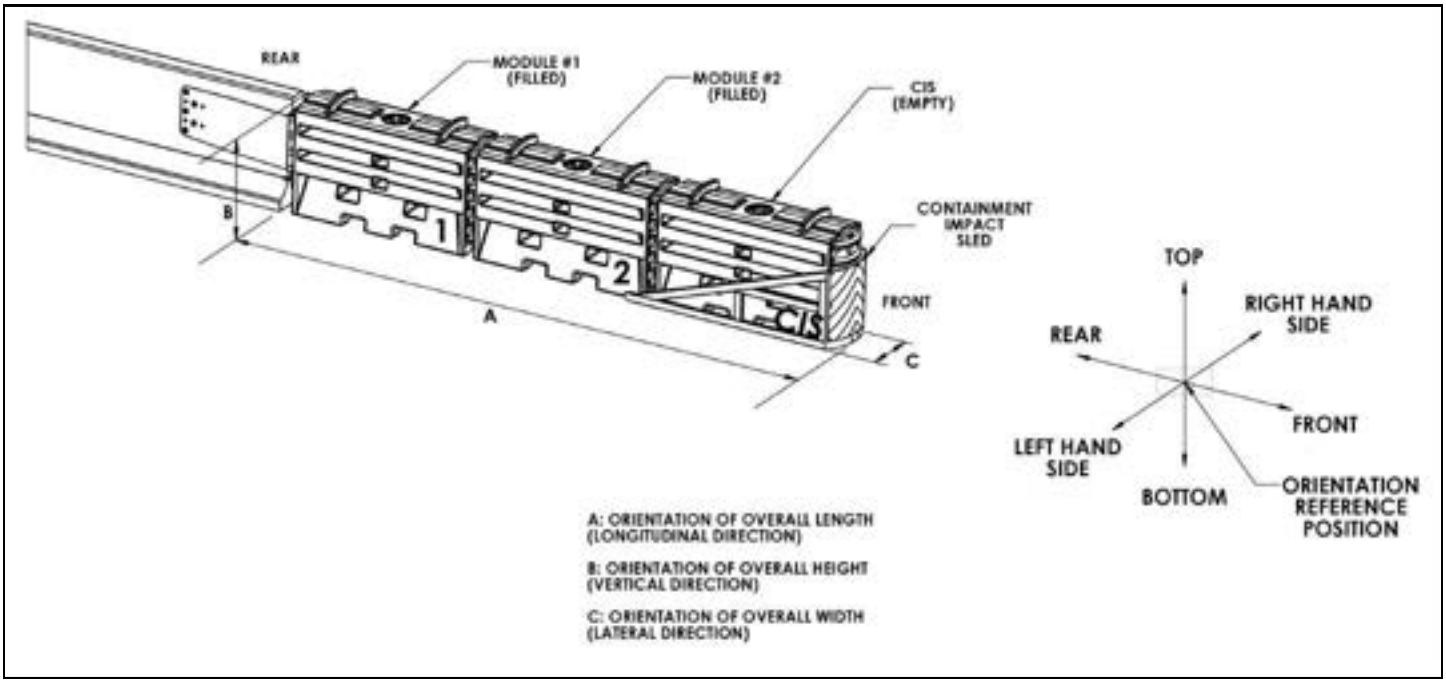

Figure 2: TL-2 SLED End Treatment Orientation.

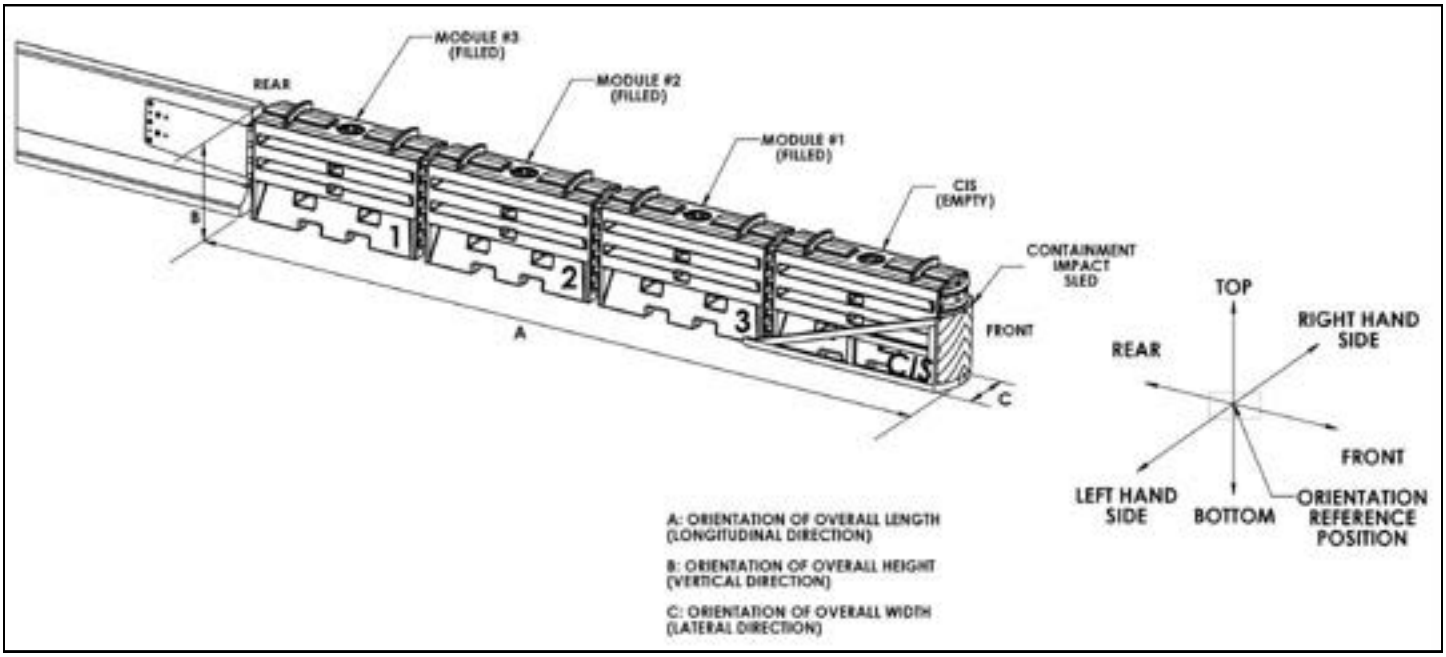

Figure 3: TL-3 SLED End Treatment Orientation.

Product Components and General Specifications

Module Specifications

All SLED End Treatment System Modules are yellow in color and have an outer shell made from energy attenuating plastic. The modules will collapse and rupture when impacted and disperse the contained water. The modules will not crack or corrode when left on the job site or stored for long periods of time.

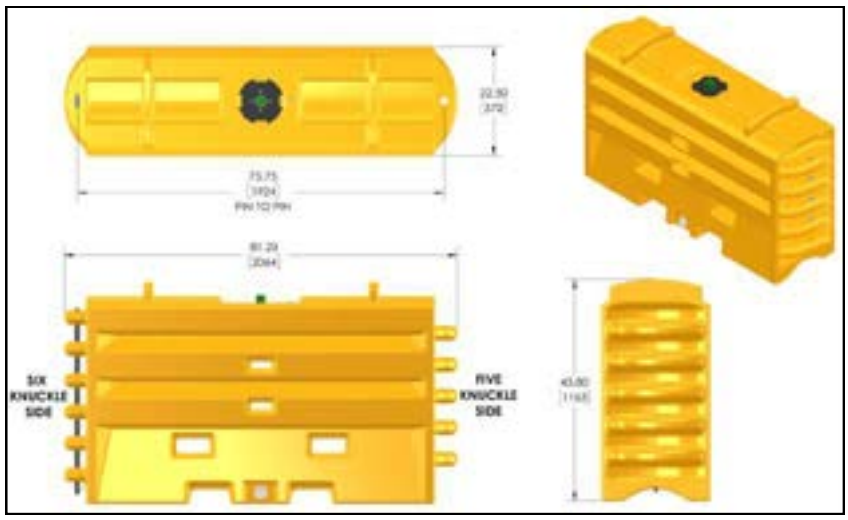

Figure 4: Module details.

Overall Dimensions:

Width: 22½" [572 mm]

Height: 42-11/16" [1084 mm]

Length: 75-3/4" [1924 mm] pin to pin

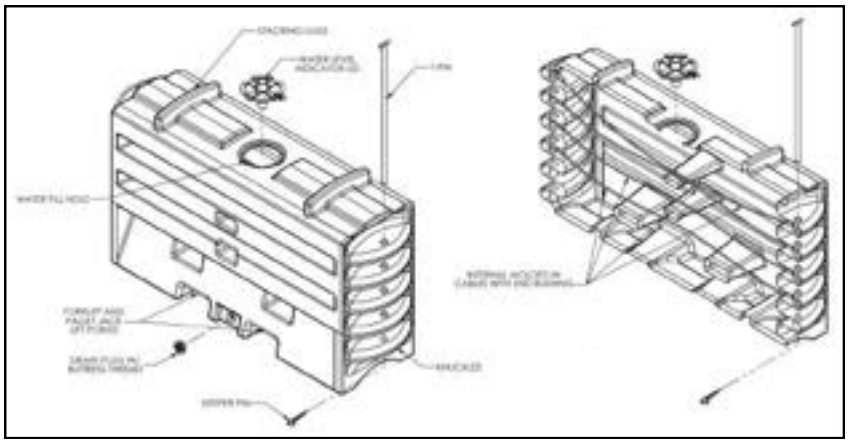

Figure 5: Module details.

Weight:

Empty Weight: 160 lbs. [73 kg]

Filled Weight: 2000 lbs. [907 kg]

Fill Capacity:

Volume: 220 Gal [832 L]

Each module contains an eight inch diameter water fill-hole located on the top surface of each module section. This large diameter opening allows for easy access for water filling using a large diameter hose from a water tanker truck. Each module comes with a twist lock lid to cover the fill hole opening when the water filling process is complete. A water level indicator is designed into the twist lock lid.

For draining, a central drain hole is located at the bottom of each module. Each drain hole contains molded-in Buttress threads. The drain plug requires 1-1/2 turns to seal the plug preventing any water leaks. The molded-in Buttress threads eliminate the possibility of cross threading compared to standard threads used in a spin welded insert. Cracked spin welded inserts may require repair and are typically not reliable, leading to water leaks. The SLED Modules, with molded in Buttress threads, eliminates both issues of cross threading and insert repair.

Two forklift pockets (slots) are designed into the modules, located at grade level, which can be used to insert forklift blades for moving the filled or unfilled SLED Modules sections as needed. **The molded-in steel cables *ARE NOT* be to be used for lifting the modules. Only the two forklift pockets (slots) should be used to lift the modules as identified in Figure 5.**

Water Level Indicator Fill Cap

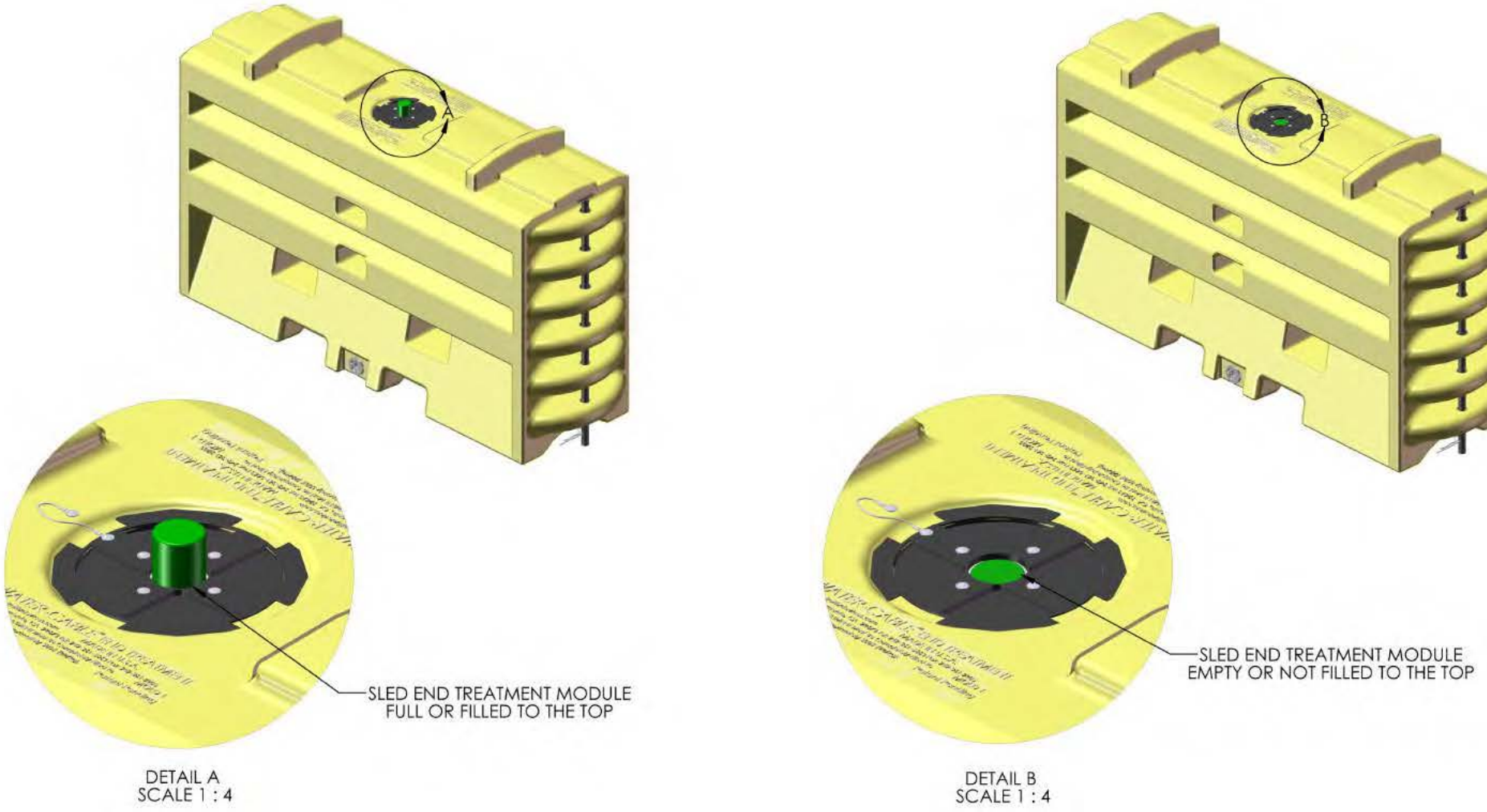

Figure 6: SLED End Treatment Module float cover.

Containment Impact Sled

The Containment Impact Sled (CIS) is attached to the front empty module (Figure 7). The steel CIS is hot-dip galvanized to minimize the effects of corrosion. Upon impact, the CIS slides rearward collecting the ruptured modules.

Overall Dimensions:
Width: 27 1/4" [692 mm]
Height: 45 7/8" [1165 mm]
Length: 88 7/16" [2246 mm]

Weight:
Weight: 197 lbs. [89 kg]

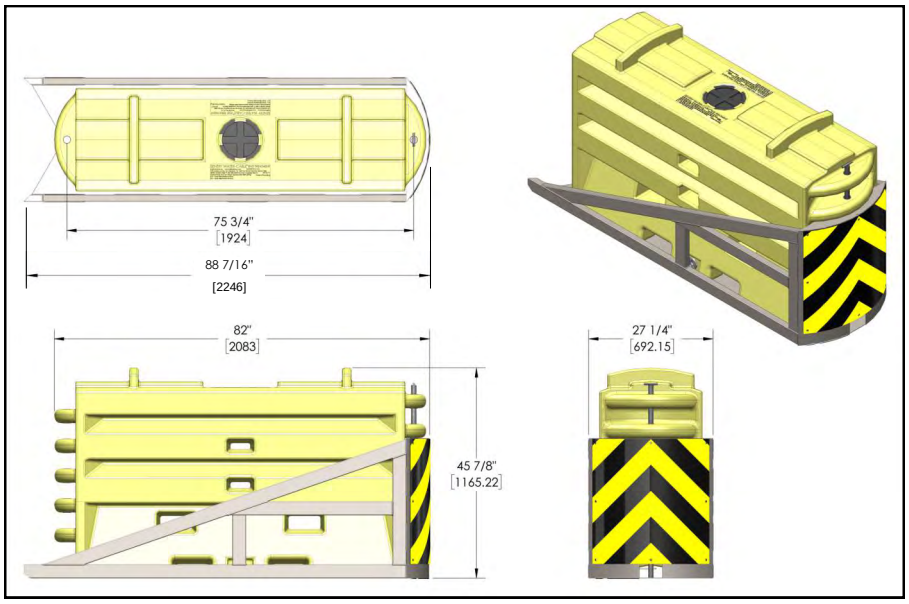

Figure 7: SLED End Treatment CIS Module.

The CIS is tube frame designed with a curved front cap and a flat steel bottom. The CIS is pinned onto empty No-Fill Module with a vertical T-pin that drops through a series of the concentric holes in the Module knuckles which align with the CIS pin hole as shown in Figure 8.

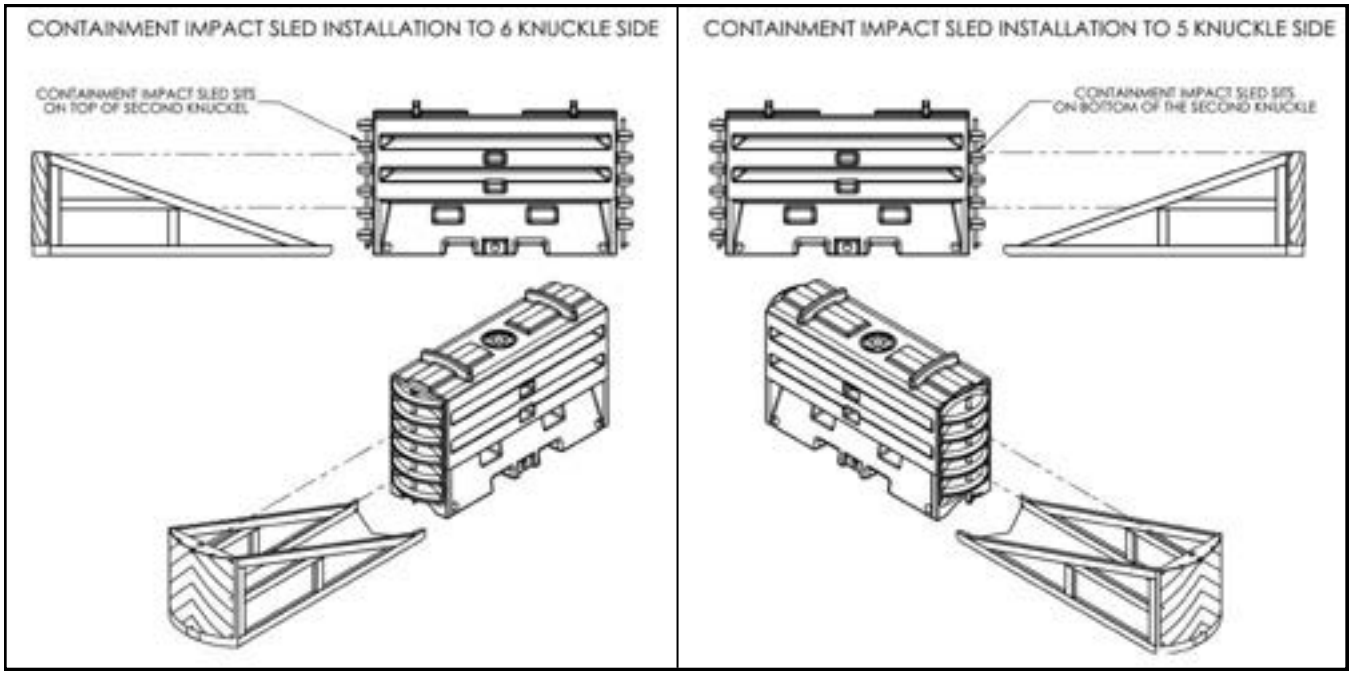

Figure 8: SLED End Treatment Sled installation to both ends of a module.

Transition Attachment For Attaching the SLED To An Array or Barrier

The Transition is made from steel sheeting and tubing that is hot-dip galvanized to minimize the effects of corrosion. The Transition attaches to the rear of the SLED system and is fastened to the shielded barrier with a minimum of eight anchor bolts, with nine bolts preferred.

Overall Dimensions:
Width: 22 3/8” [568 mm]
Height: 20 7/8” [530 mm]
Length: 49 5/8” [1260 mm]

The Transition consists of a frame, transition panels, and connection pins. The frame, Figures 9 and 11, is connected to Module 1.The transition frame is designed to attach to either the five or six knuckle end of the rear module, shown in Figure 10.

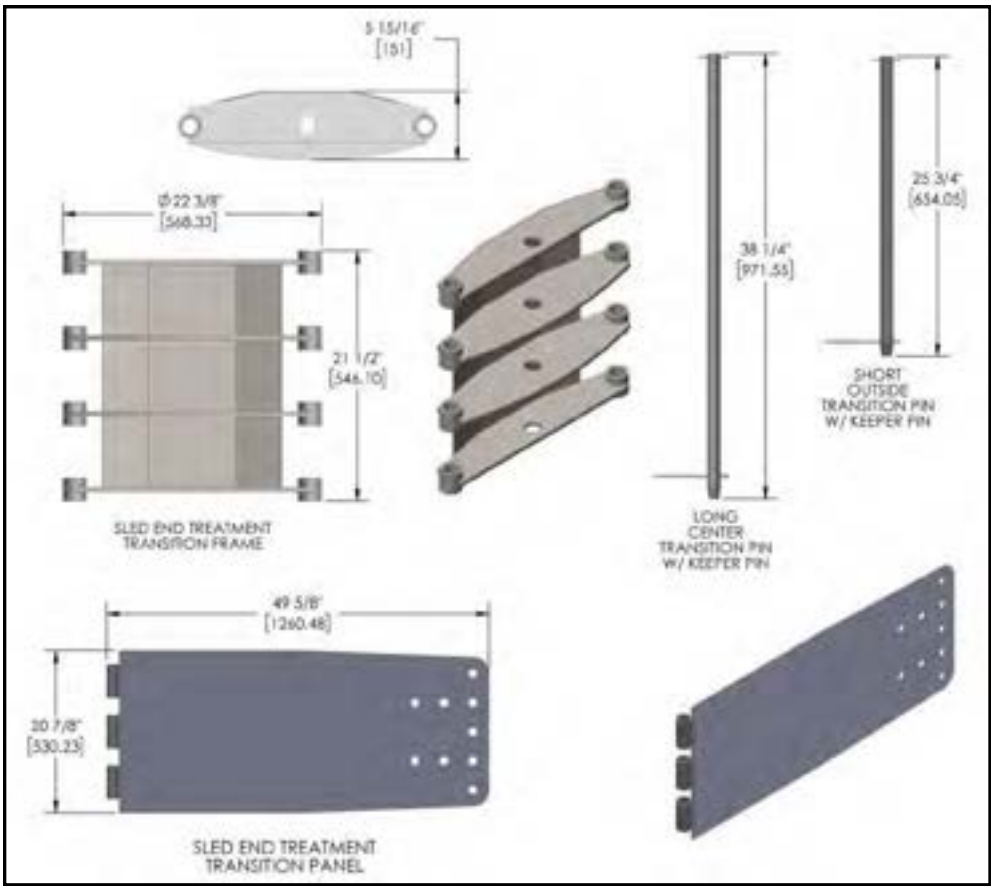

Figure 9: SLED End Treatment Transition.

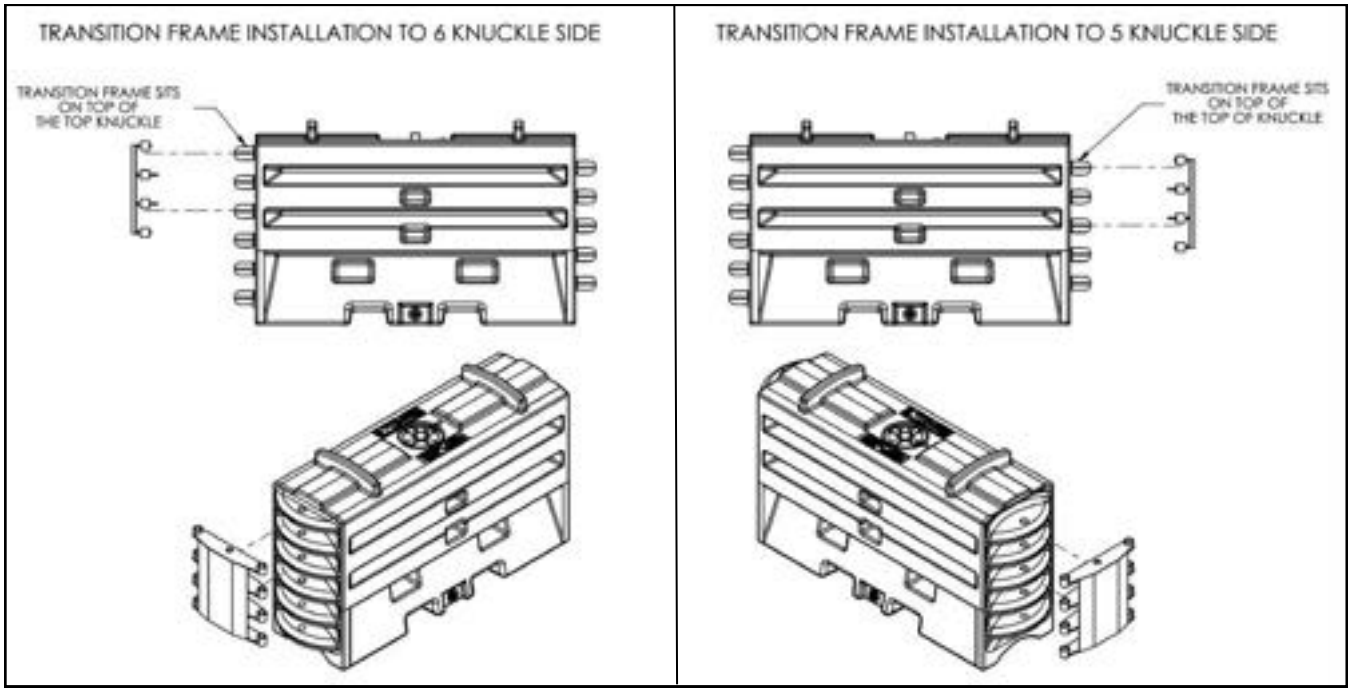

Figure 10: SLED End Treatment Transition Frame installation to both ends of a module.

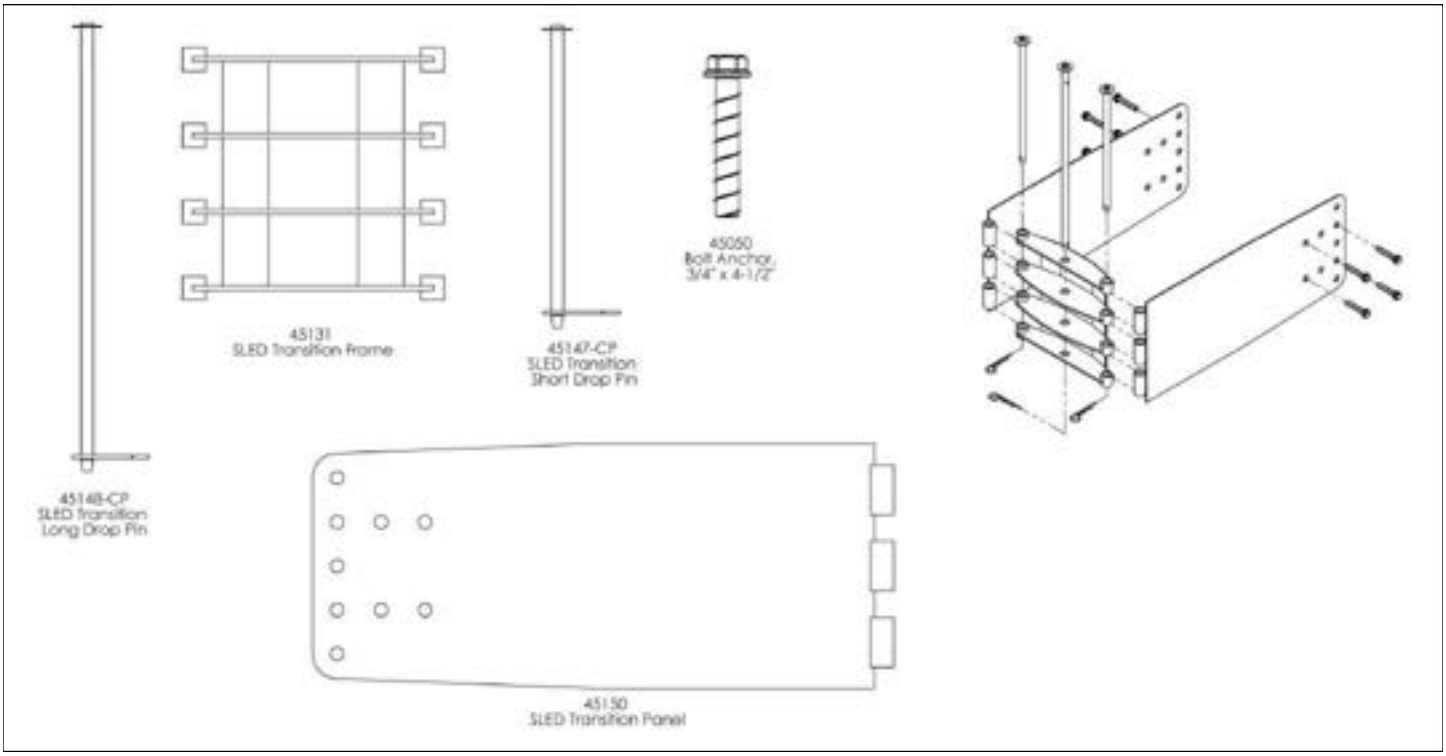

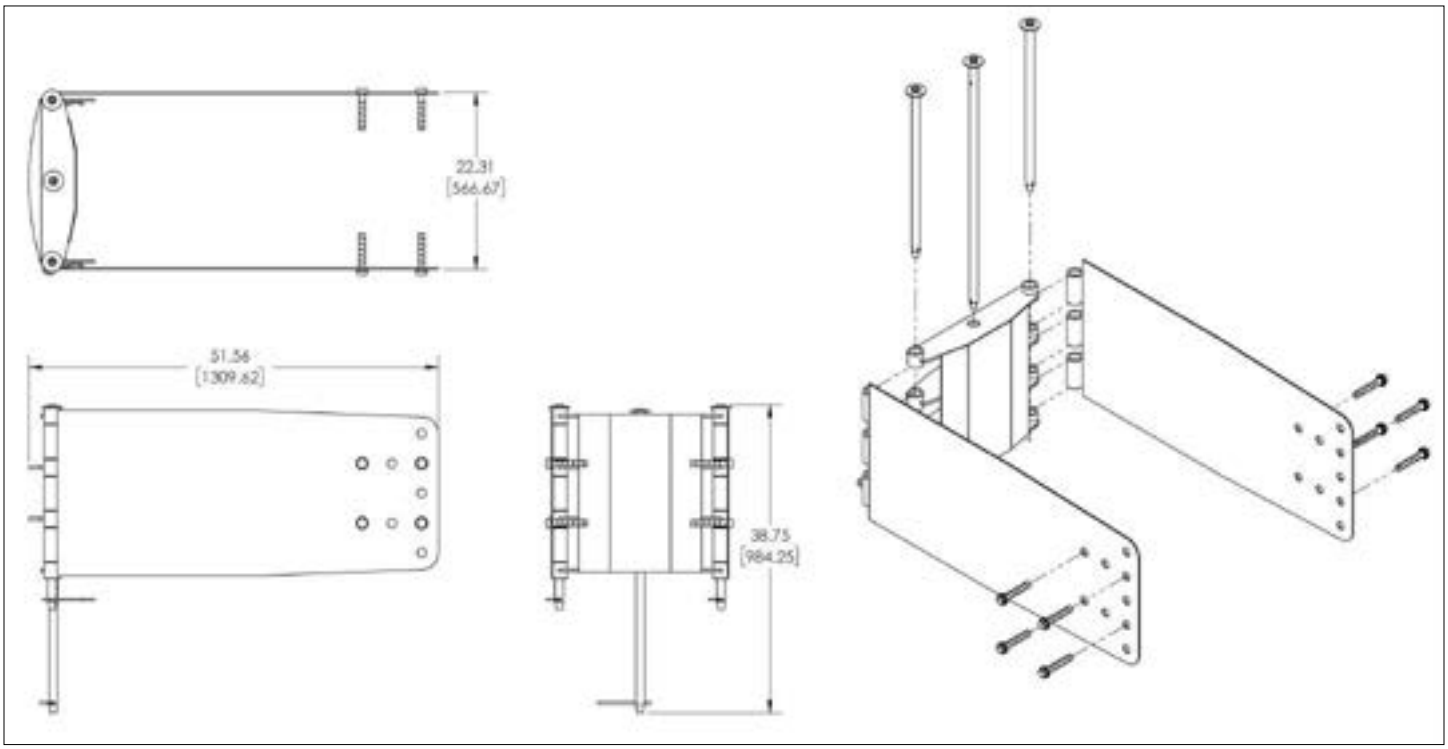

Figure 11: Transition Components

SLED Parts Checklist



P/N 45131

SLED Transition Frame

Qty. 1

☐



P/N 45147

SLED Transition Short Drop Pin, 25-3/8”

Qty. 2

☐

** Must be used with Keeper Pin (45032-PN)*



P/N 45148

SLED Transition Long Drop Pin, 38”

Qty. 1

☐

** Must be used with Keeper Pin (45032-PN)*



P/N 45150

SLED Universal Transition Panel

Qty. 2

☐



P/N 45050

Anchor Bolt, 3/4” x 4-1/2”

Qty. 8

☐

SLED Parts Checklist



P/N 45032-PN

Keeper Pin

Qty. 7

☐



** Must be used with Keeper Pin (45032-PN)*

P/N 45043-CPGAL

SLED T-Pin

Qty. 4

☐



P/N 45044-Y-CIS

Containment Impact Sled (CIS) Steel Frame w/ Nose Sheeting and No Fill Module

Qty. 1

☐

NOTE: *All Fill Modules include Water Level Indicator Float Lid*

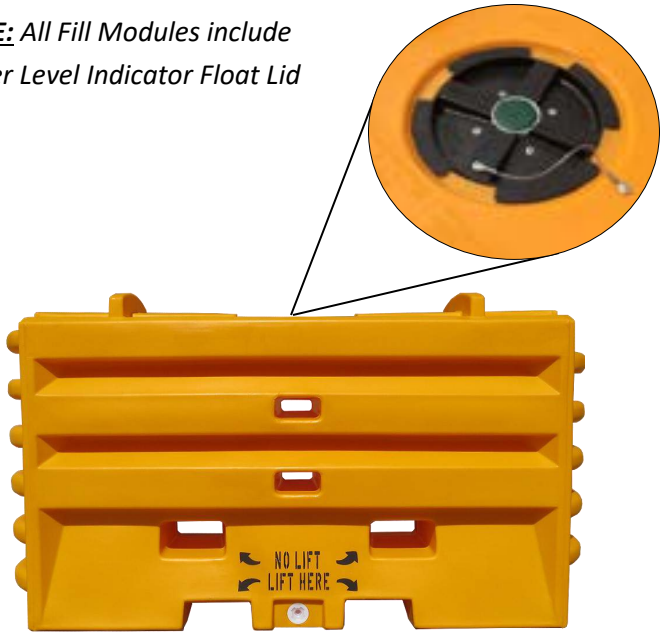

P/N 18009-B-I

Water Level Indicator Float Lid

Qty. 3

☐

P/N 45044-YEL

SLED Water Filled Module

Qty. 3

☐

Directional Application Definition

The SLED End Treatment modules are designed for uni- and bi-directional traffic applications where a gating device is acceptable to the road authority. A general definition of these applications are described below and graphically displayed in Figures 12 and 13.

Uni-Directional Application: Uni-directional refers to the flow of traffic in a single direction as seen in Figure 12. In this type of application opposite direction impacts would not be probable.

Bi-Directional Application: Bi-directional refers to the flow of traffic in both directions typically referred to as counter flow as seen in Figure 13. In this type of application the counter flow of traffic could result in a reverse impact into the SLED End Treatment System.

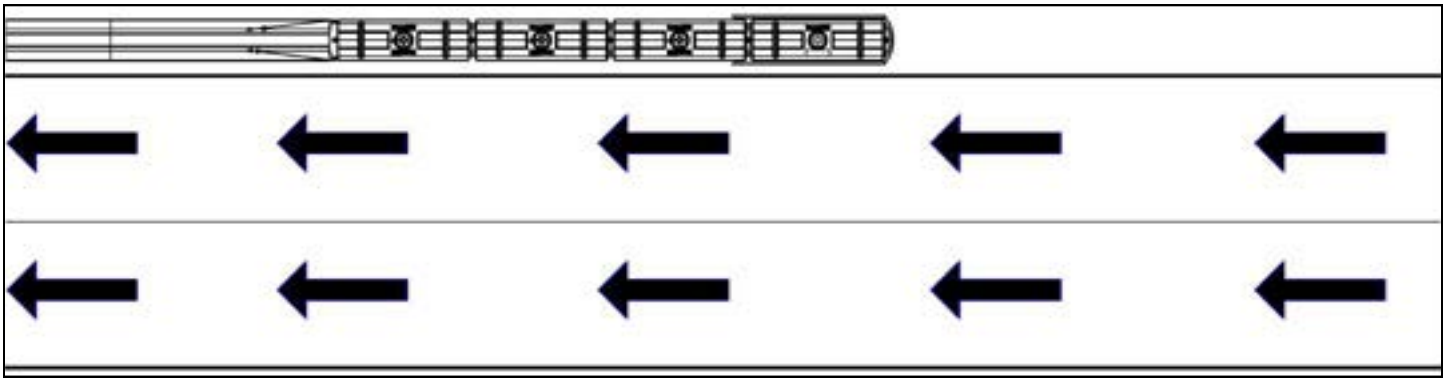

Figure 12: Traffic flow uni-directional application.

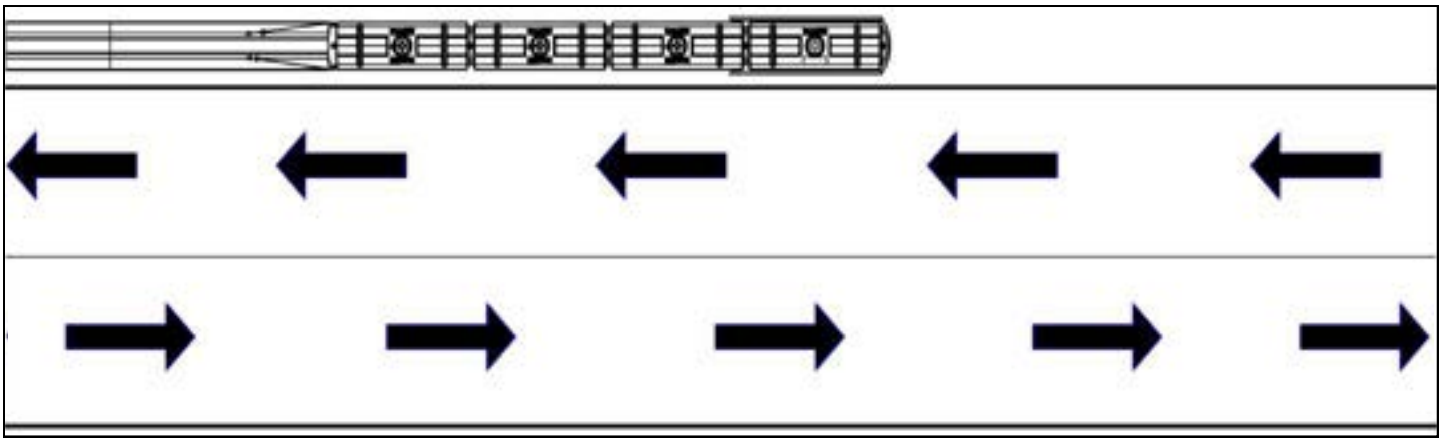

Figure 13: Traffic flow bi-directional application.

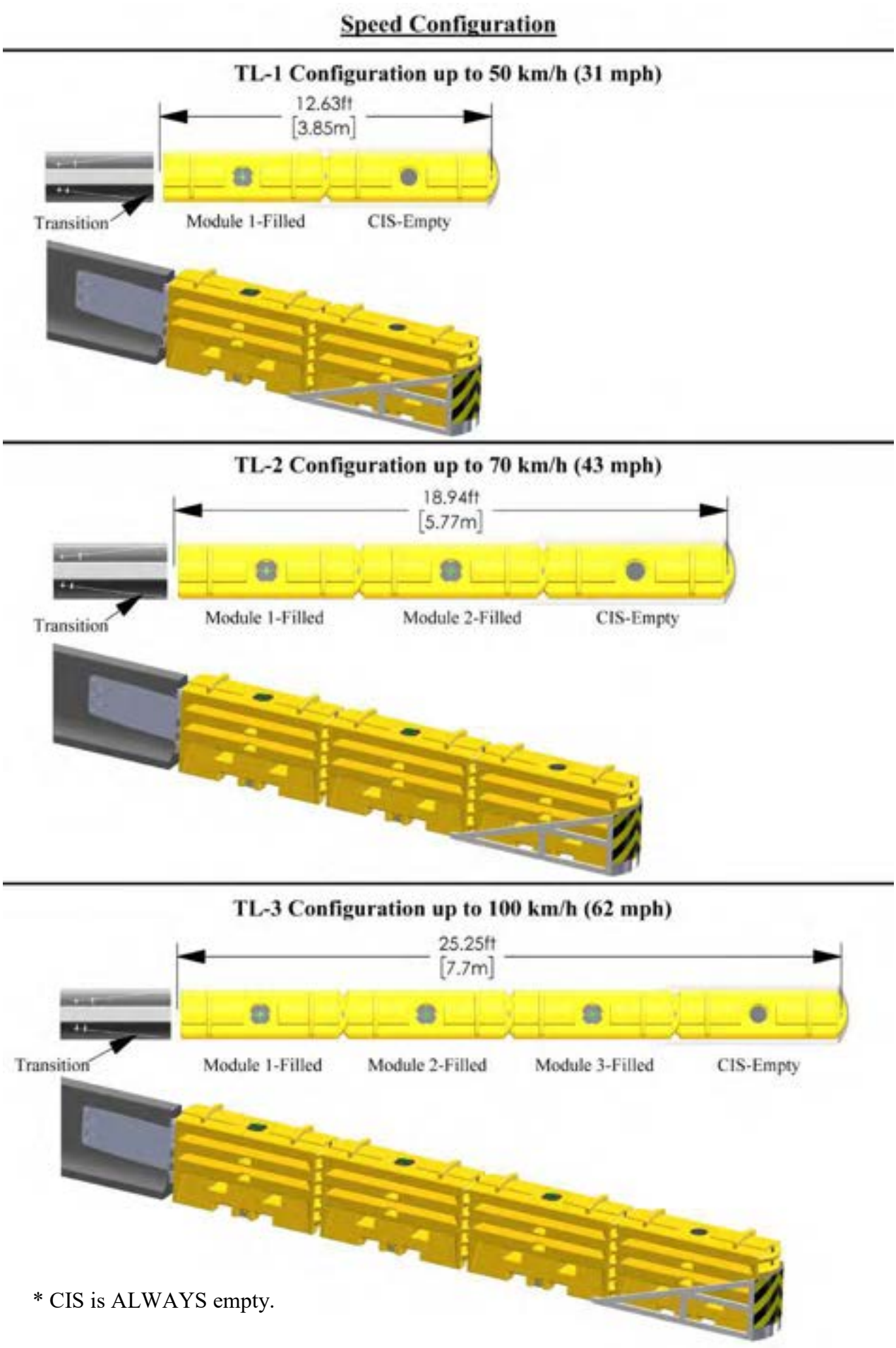

* CIS is ALWAYS empty.

Figure 14: SLED End Treatment Speed Configurations

Recommendations for Stacking

Modules can be stacked ***ONLY*** when empty and are not designed to be stacked on each other when filled. Stacked empty modules can be no more than three high as seen in Figure 15. Designed into the top surface of each module are stacking lugs which fit into recessed formed sections on the bottom surface of each module as seen in Figure 15. These stacking lugs interlock the modules preventing the wall from shifting during transport or storage. The stacking lugs should be used in conjunction with straps to securely hold the entire stacked pieces together. For additional support, a long T-pin can be inserted into the knuckles to secure the modules as seen in Figure 15.

FOR STORAGE, STACK EMPTY ONLY - DO NOT STACK WHEN FILLED.
STACK ONLY THREE HIGH - MAXIMUM.
FOR STABILITY, A VERTICAL LOCK PIN CAN BE USED
TO VERTICALLY INTERLOCK SECTIONS TOGETHER.

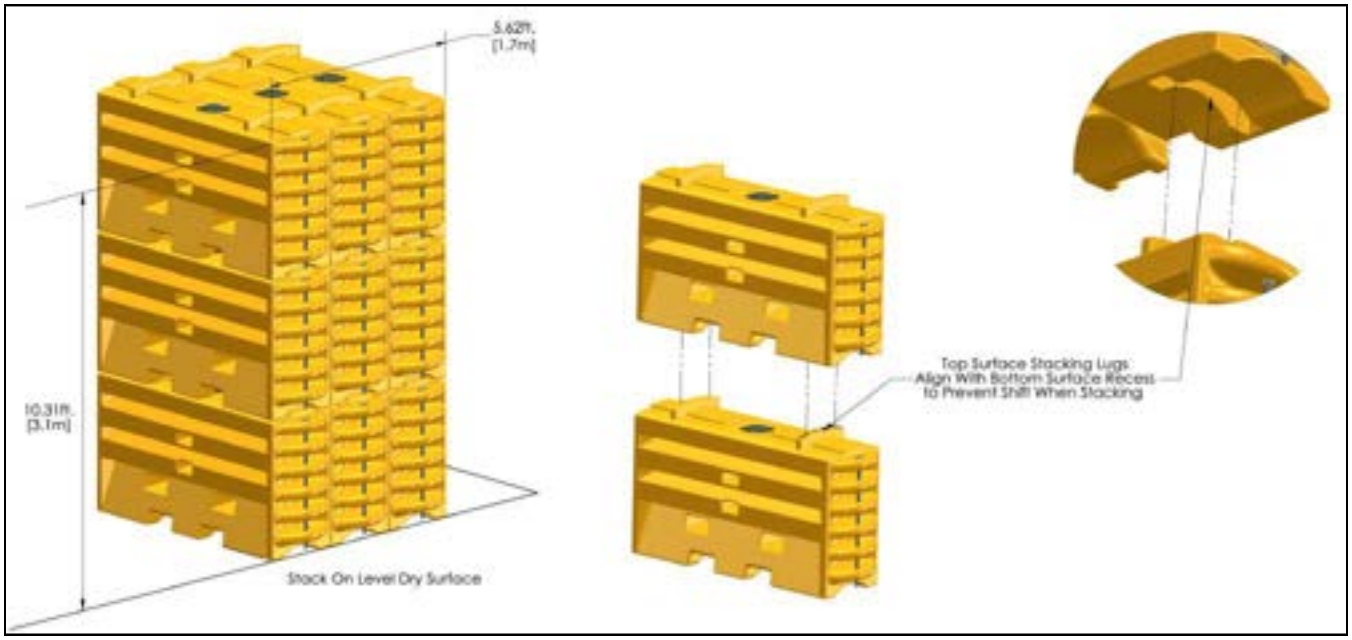

Figure 15: Module Stacking Diagram for Long Term Storage Requirements

SAFETY PRECAUTIONS WHEN HANDLING THE SLED END TREATMENT MODULES

Do not drive with two (2) or more filled modules on a forklift. If maneuvering filled modules is necessary using a forklift, only move filled modules one (1) at a time. If the modules are empty, a maximum of three (3) stacked modules may be moved using a forklift. NEVER stack modules when filled, and NEVER stand underneath or in front of the forklift when handling the modules with a forklift, as modules may fall, see Figure 16.

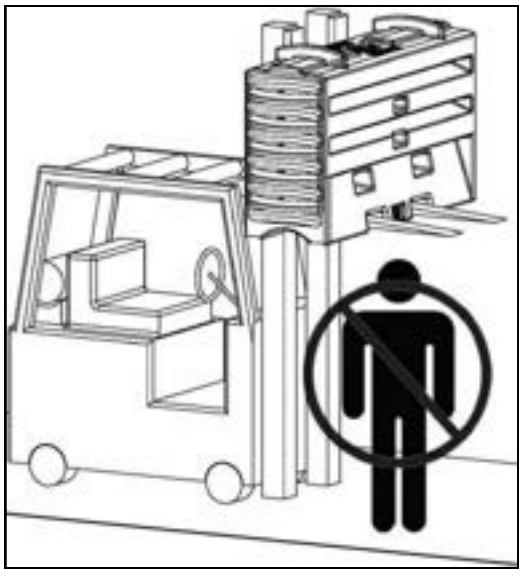

Figure 16: Proper Forklift Procedure

Water Freezing Prevention

In freezing weather conditions, do not allow the water in the SLED modules to freeze to a solid mass of ice. If the temperature at the SLED site is expected to be at or below the freezing point of water 32° F [0°C], it is recommended that an additive be used to prevent the water in the SLED modules from freezing.
See Table 1 on pg. 17.

-Common additives used to prevent water freezing currently used in work zone devices under the same category as the SLED Modules.

SALT (Sodium Chloride)

20% mixture by weight

Reduces freezing down to 0° F [-18° C].

Corrosive to inadequately protected steel components (Galvanizing adequately prevents corrosion)

Recommended - premix before filling

Prevent spilling since solution is harmful to vegetation, soils, and wildlife. Draining should be done in an acceptable area.

CALCIUM CHLORIDE

35% mixture by weight

Reduces Freezing down to 20° F [-6.6 °C].

Corrosive to thin zinc plated components

Corrosive to inadequately protected steel components (Galvanizing adequately prevents corrosion)

High tendency to stay on road surface resulting in slick road surface.

High level of heat created when mixing. It is recommended that pre-mixing is done before filling.

Prevent spilling since solution is harmful to vegetation, soils, and wildlife. Draining should be done in an acceptable area.

ETHYLENE/PROPYLENE GLYCOL

50% mixture by volume

Reduces water freezing to 0° F [-18° C].

High tendency to stay on road surface resulting in slick road surface.

Prevent spilling since solution is harmful to vegetation, soils, and wildlife. Draining should be done in an acceptable area.

LIQUID CMA (Calcium Magnesium Acetate)

25% mixture by volume

Reduces water freezing to 0° F [-18° C].

Has a low environmental impact.

LIQUID POTASSIUM ACETATE

60% mixture by volume

Reduces water freezing to 20° F [-6.6° C]

Low corrosive characteristics and has a low environmental impact.

Table 1- Recommended water freezing prevention chart solution comparison.

Additive	Environmental Impact	Cost Rating	Protection Temp	Mix Solution Ratio
Salt (Sodium Chloride)	Harmful	Low	0 °F [-18 ° C]	20% by weight
Calcium Chloride	Harmful	Medium	20 °F [-6.6 ° C]	35% by weight
Ethylene/Propylene Glycol	Dangerous	High	0 °F [-18 ° C]	50% by volume
Liquid CMA	Non-Toxic	High	0 °F [-18 ° C]	25% by volume
Liquid Potassium Acetate	Non-Toxic	High	20 °F [-6.6 ° C]	60% by volume

Installing SLED Nose Sheeting

The SLED nose sheeting has been provided as a way to customize for field use as seen in Figure 17. On Side A, the diagonal stripes can but used for Left Hand traffic flow or rotated 90° for Right Hand traffic flow. Turn the sheeting over and Side B is used for gore point traffic flow. Once the direction is determined, secure the sheeting to the nose with supplied screws.

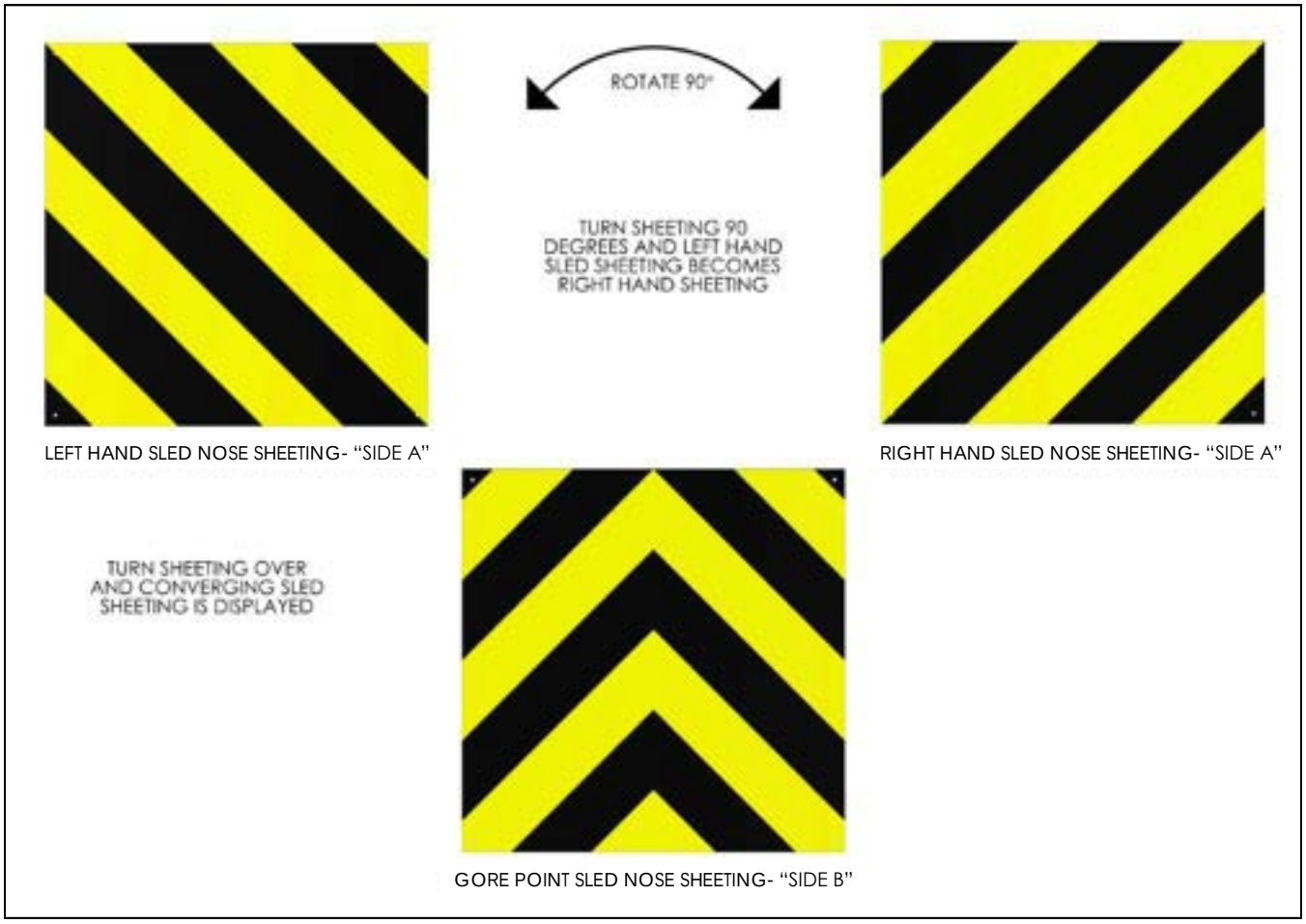

Figure 17: SLED Nose Sheeting Installation

Tools and Equipment for Assembly and Installation

This list of tools is a recommendation. The actual tools required will depend on site conditions for the assembly and installation. Personal protective equipment should always be used during assembly and installation. Safety eyewear, steel toe boots, hard hat and gloves are recommended as protection devices for the installer's safety.

Documents:

Before the assembly and installation of this product, it is recommended that the complete manufactures manual and drawing package be reviewed for clarity of the installation.

Tools:

Concrete Hole Drilling Tools: (Suggestions Would Be)

-Two Fluted Concrete Drill Bit 3/4" Diameter (w/ 8" minimum drill length)

-Rebar Cutting Drill Bit 3/4" Diameter (w/ 8" minimum drill length)

-Rebar Eater or Cutter

-Rotational Hammer Drill

Drill bits should be capable of drilling to depths of a minimum of 6 inches into the concrete barrier and be of a good enough quality to drill through 4000 psi concrete.

Additional Tools:

In addition to hole drilling tools, the following is suggested:

-Electrical Generator (5 kW) and Air Compressor (100 psi)

-Torque Wrench, 200 ft-lbs. minimum

-Impact Wrench 1/2" Drive

-Sockets 1/2" Drive 3/4"-2" Nut and Bolt Size Shallow and Deep Sockets

-Ratchet and Extensions 1/2" Drive

-Adjustable Wrench 12"

-Pry/Breaker Bars

-Sledge and Ball Peen Hammers

-Chalk Line

-Concrete Marking Pencil

-Tape Measure

Optional Tools:

Tools that may also be needed: Grinder, Hacksaw, or Torch

SLED End Treatment System Installation

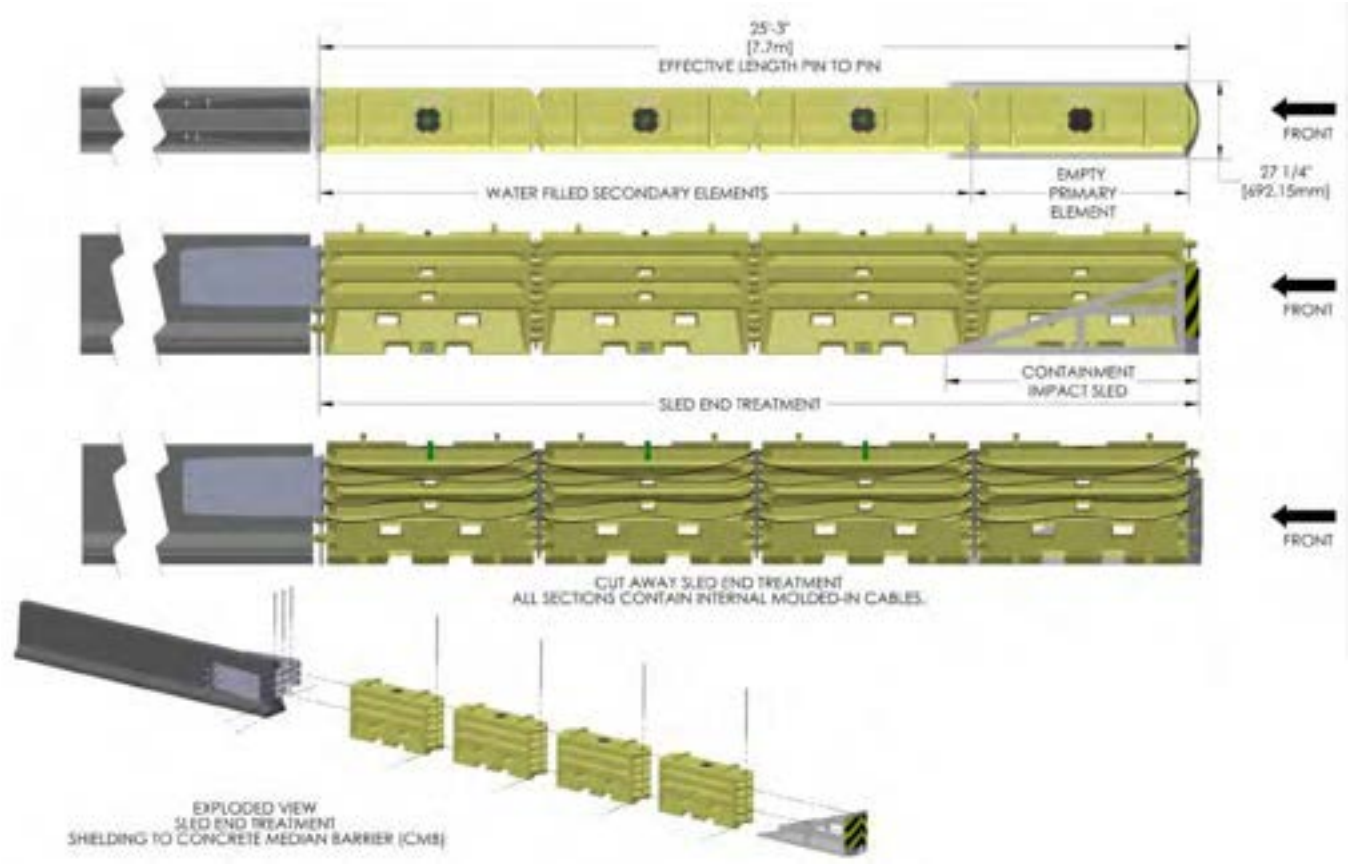

Figure 18: General specifications of installed TL-3 SLED End Treatment system with Transition.

Installation procedure to begin on next page

IMPORTANT:

Read and understand ALL installation instructions before attempting to install the SLED End Treatment System.

TERMS:

Orientation:

Front or Foremost is towards the nose of the system - towards traffic.
Rear or Rearmost is towards the back of the system - towards the barrier wall.

SLED Transition System Overview:

The SLED Transition consists of several components including the Transition Frame, two (2) Transition Panels, one Long Drop Pin (located in the middle), two (2) Short Drop Pins (one on left side, one on right side), three (3) Keeper Pins (R-Clips) and the anchoring hardware. (Fig. A)

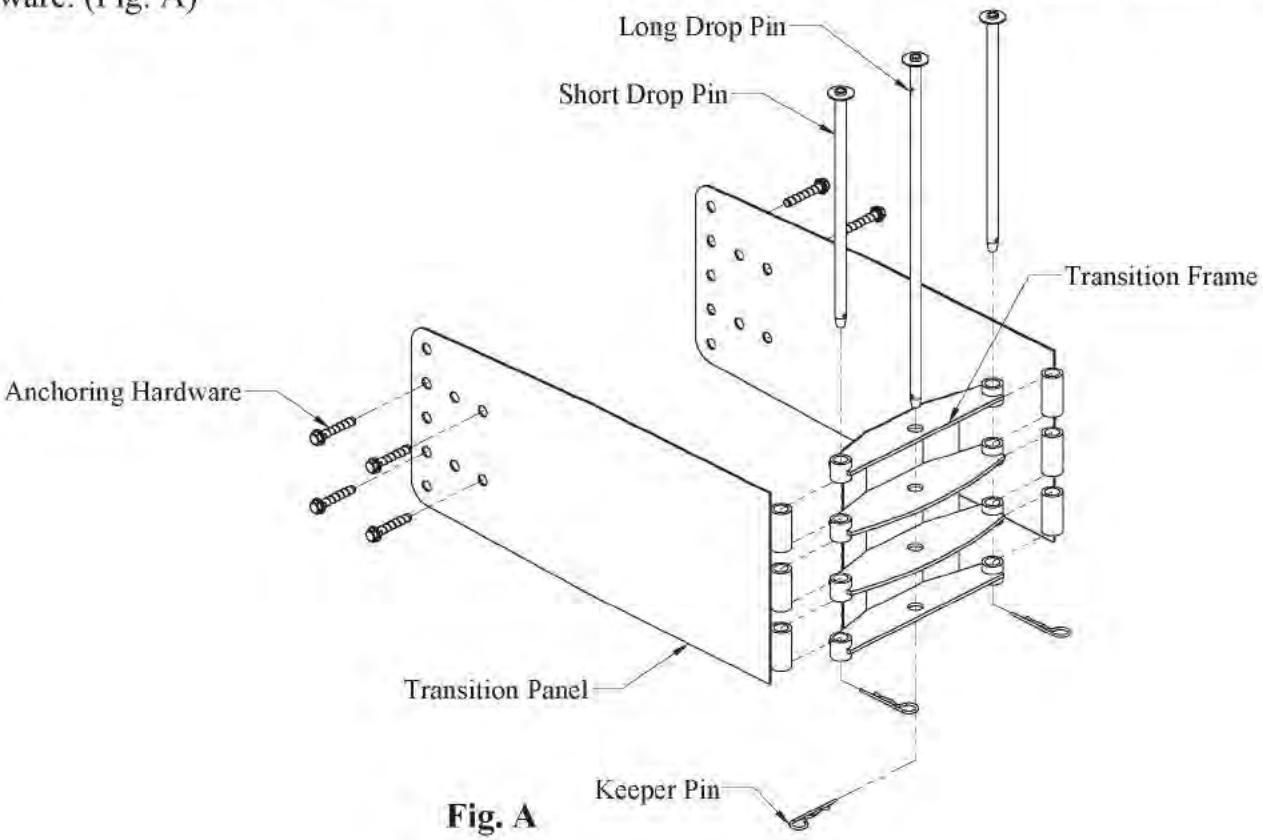

Fig. A

Installing the Transition Frame and locating the Rearmost Yellow SLED Module

Step 1:

Install the Transition Frame to the rearmost Yellow SLED Module so that the top rib of the Transition Frame sits on the highest knuckle of the Module. Align center holes of the Transition Frame and the knuckles of the Module.

Note: For attaching to shorter CMB, use the second (or third) knuckle (from top) of the Module, depending if you are using the five (5) or six (6) knuckle end of the Module. (***Important:*** Always start with the top knuckle and adjust downward, if necessary.) (Fig. C)

Step 2:

Insert the Long Drop Pin through the center holes of the Transition Frame and the Module knuckles until the Long Drop Pin is fully bottomed out.

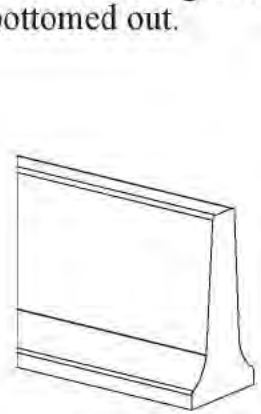

Fig. B

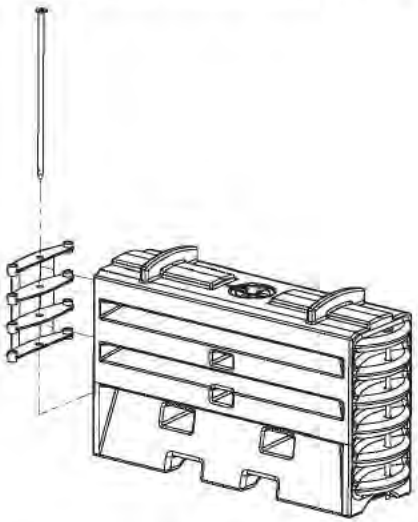

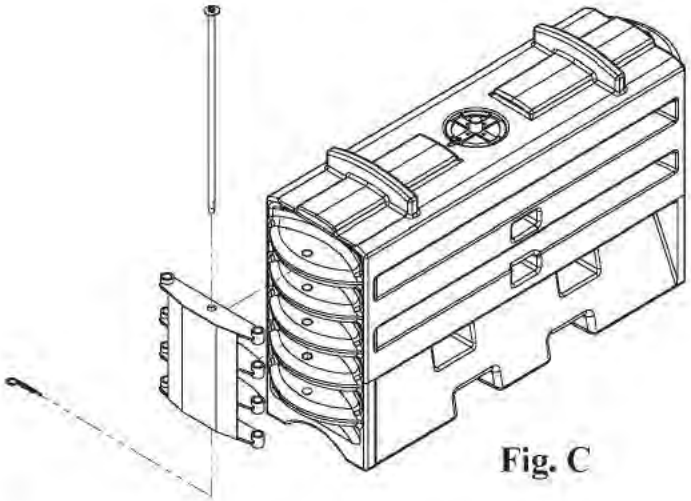

Fig. C

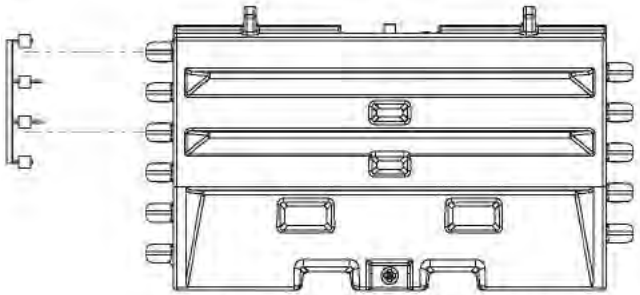

Transition Frame Installed on
6 Knuckle Side

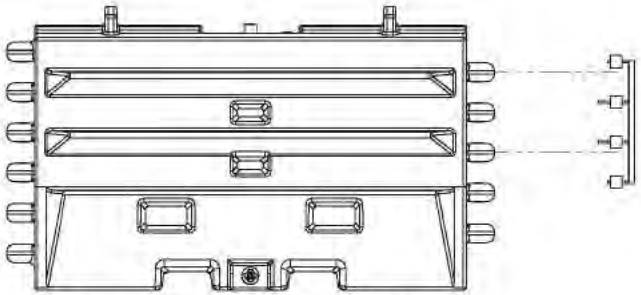

Transition Frame Installed on
5 Knuckle Side

Installing the Transition Frame and locating the Rearmost Yellow SLED Module (Continued)

Step 3:

Push the Module inline towards the barrier wall leaving approximately four (4) inches of space between the Module knuckles and the barrier. (Fig. D)

Step 4:

Secure the Long Drop Pin by inserting the Keeper Pin (R-Clip) through the small hole near the bottom of the Long Drop Pin. (Fig. E)

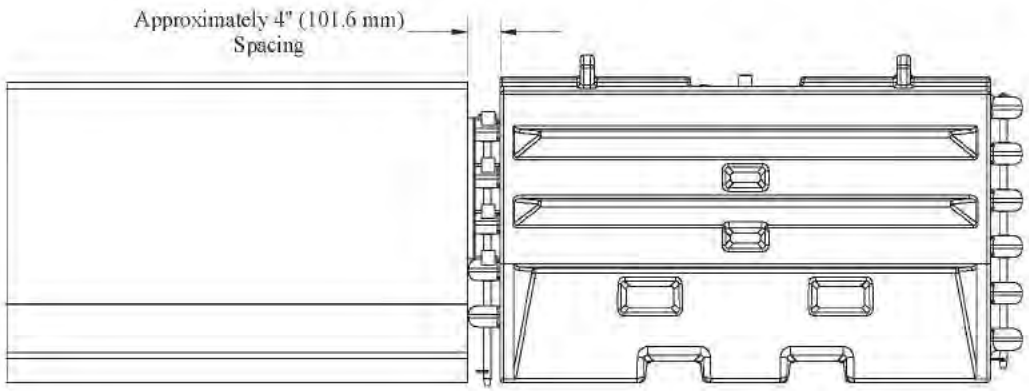

Fig. D

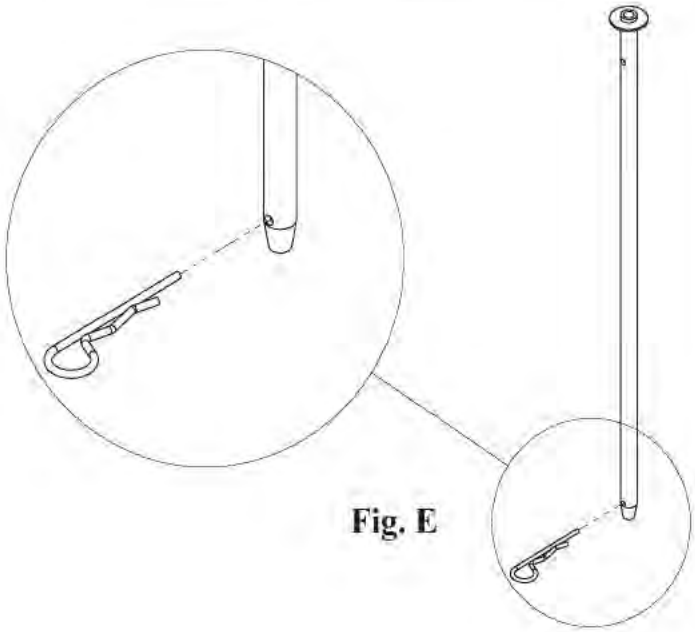

Fig. E

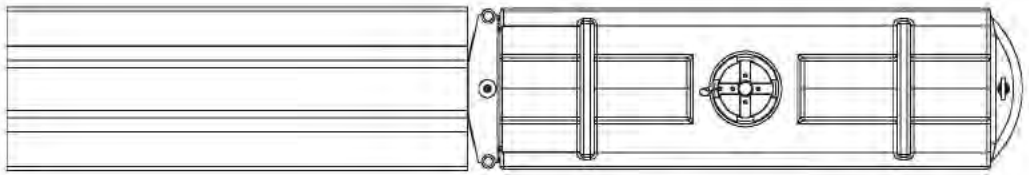

Installing the Short Drop Pins, Transition Panels, and anchoring to the barrier wall

Step 5:

Align the Transition Panel hinge(s) with the Transition Frame hinge(s). Each Transition Panel is universal and will fit on either side. Be sure to install the Transition Panels with the hinges on the inside (facing the barrier) and the panel on the outside (facing traffic) (Fig. F).

Step 6:

Install the two (2) Short Drop Pins, one on the left and one on the right, from the top until the Pins have fully bottomed out. (Fig. G) Secure the Short Drop Pins by inserting the Keeper Pins (R-Clips) through the small through hole near the bottom of each Short Drop Pin. (Fig. E) The hinges should now freely rotate about the hinge axis.

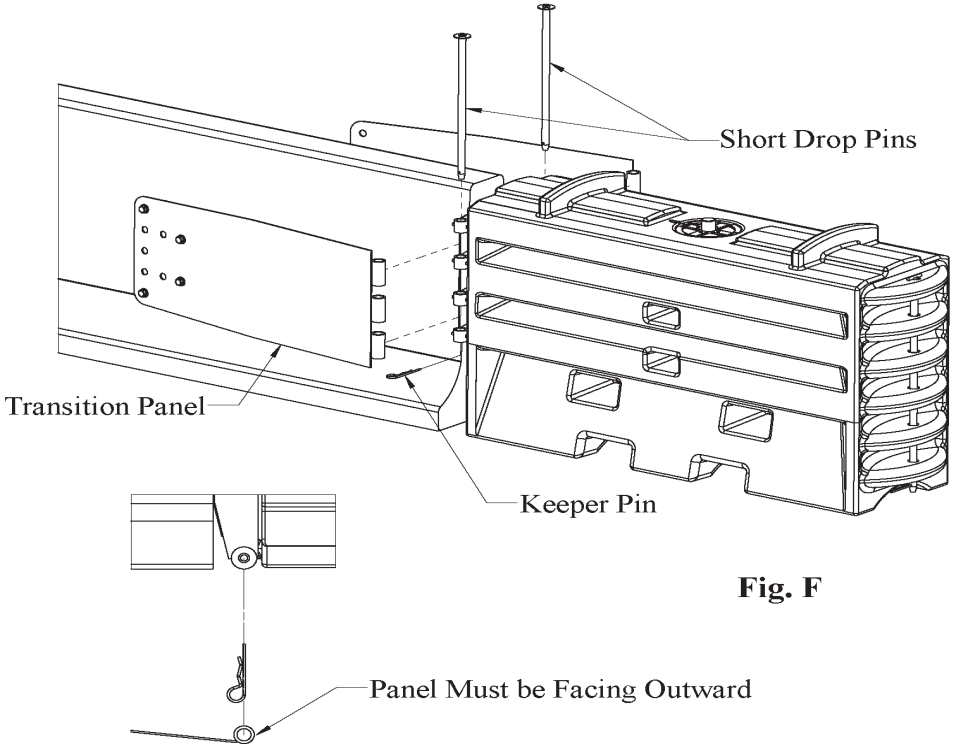

Fig. F

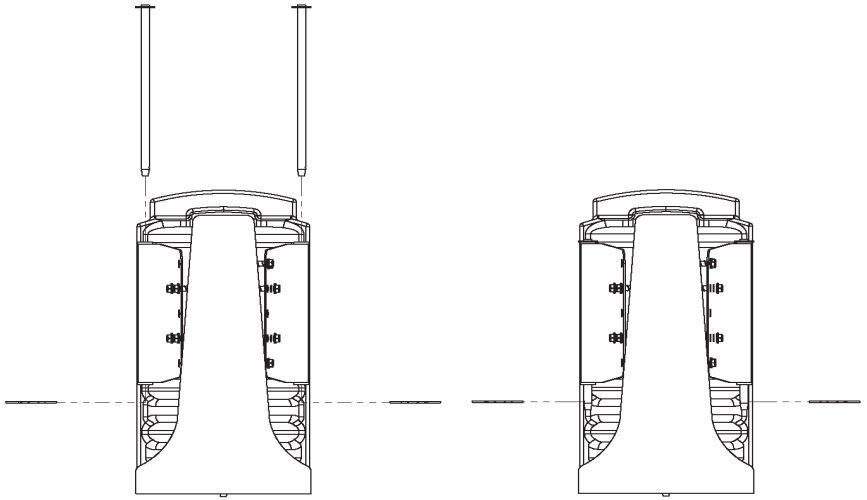

Fig. G

Installing the Short Drop Pins, Transition Panels, and anchoring to the barrier wall (Continued)

Step 7:

To anchor the Transition Panels to the barrier wall, refer to the Resident Engineer's (RE) recommendations. ***Note:*** **The SLED Transition System requires a minimum of eight (8) expanding anchor bolts with four (4) on each side. (Fig. H).** ***Note:*** **The four (4) anchor bolt pattern on one side and the four (4) anchor bolt pattern on the opposing side should avoid using the same mounting holes on the opposing panels to prevent contacting each other inside the barrier.** Anchoring methods may vary per the RE's recommendations.

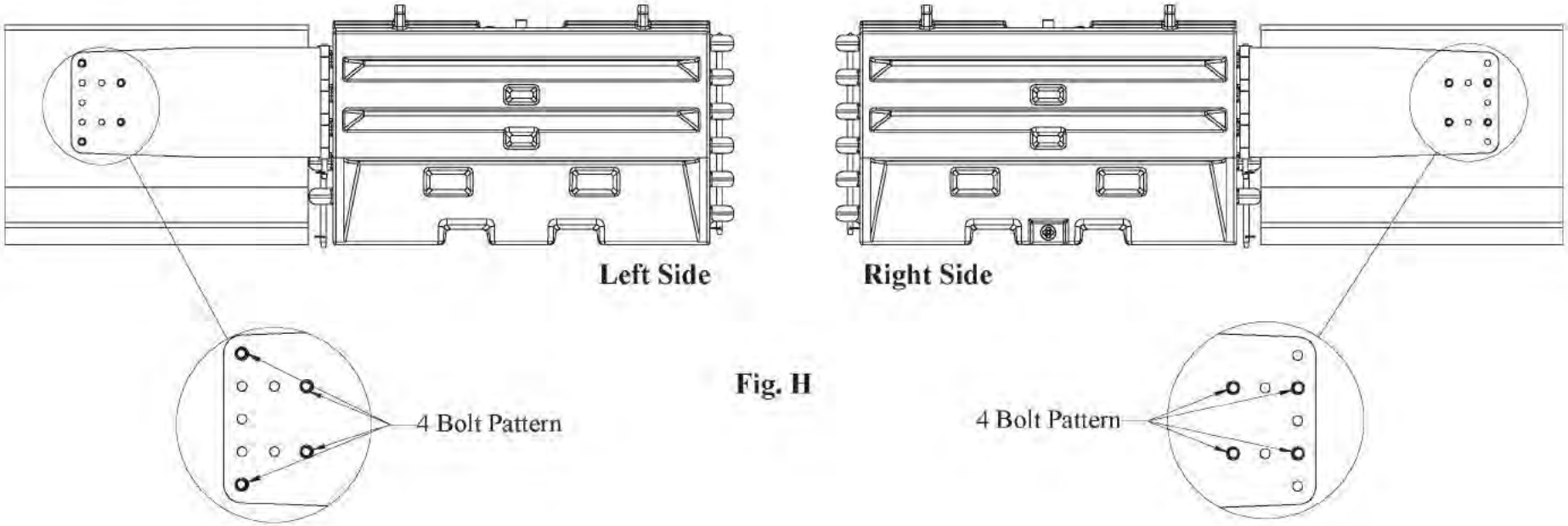

Fig. H

Installing Additional Yellow Water Filled Modules

Step 8:

Install the next Yellow Water Filled Module by pushing this Module into the already installed rearmost Yellow Water Filled Module, such that the knuckles of each Module are positively interlocked and the holes are aligned. Be sure to mate up the five (5) knuckle Module end with a six (6) knuckle Module end. Insert the T-Pin from the top until the T-Pin contacts the ground. Secure the connection between Modules by inserting the Keeper Pin (R-Clip) through the small through hole near the bottom of the T-Pin. (Fig. I)

For TL-2 INSTALLATION, PROCEED TO STEP 10
For TL-3 INSTALLATION, PROCEED TO STEP 9

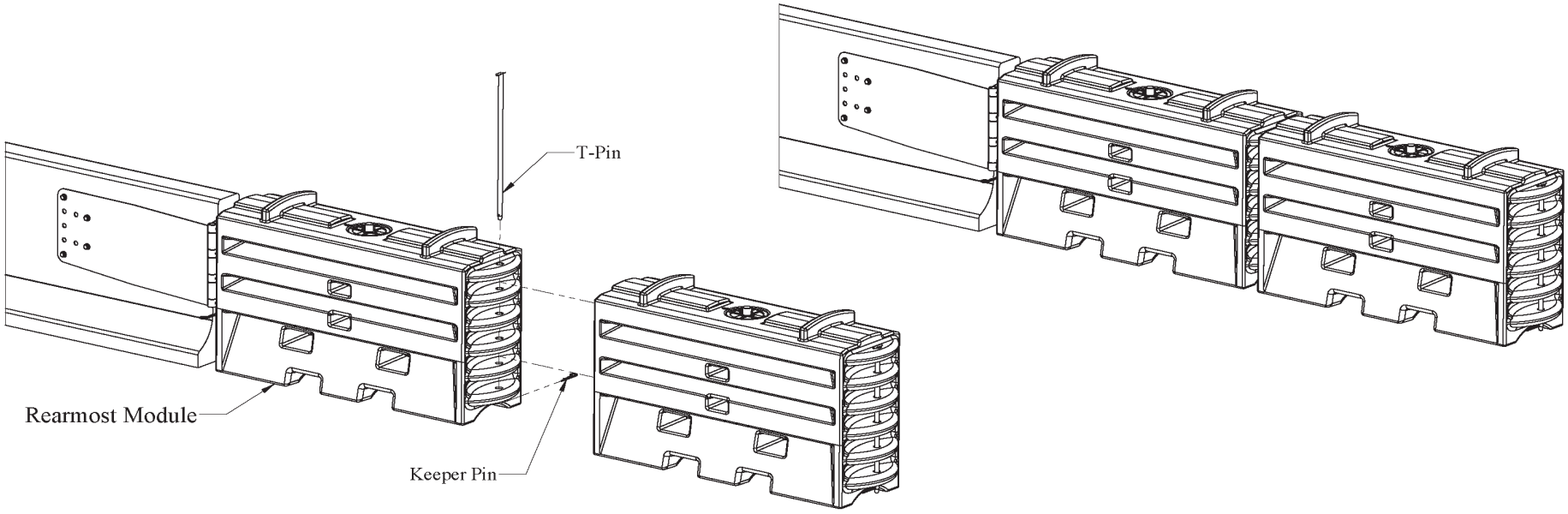

Fig. I

Installing Additional Yellow Water Filled Modules (Continued)

Step 9:

Install the last Yellow Water Filled Module by pushing this Module into the already installed front most Yellow Water Filled Module, such that the knuckles of each Module are positively interlocked and the holes are aligned. Be sure to mate up the five (5) knuckle Module end with a six (6) knuckle Module end. Insert the T-Pin from the top until the T-Pin contacts the ground. Secure the connection between Modules by inserting the Keeper Pin (R-Clip) through the small hole near the bottom of the T-Pin. (Fig. J)

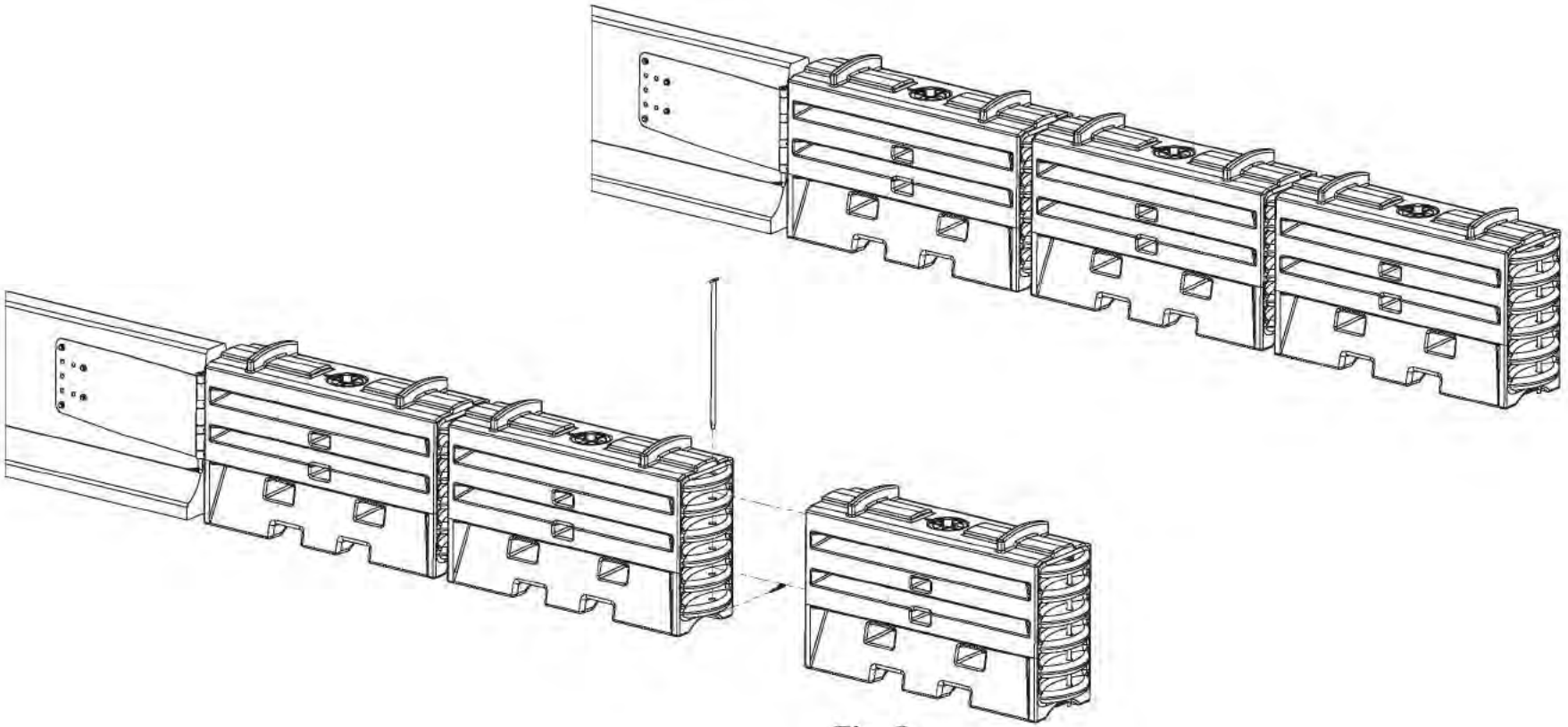

Fig. J

Installing the Containment Impact Sled (CIS)

Step 10:

The Containment Impact Sled (CIS) consists of several components including the SLED CIS Frame, a Yellow No Fill Module, T-Pin and Keeper Pin. These items are pre-assembled and delivered as one unit. (Fig. K)

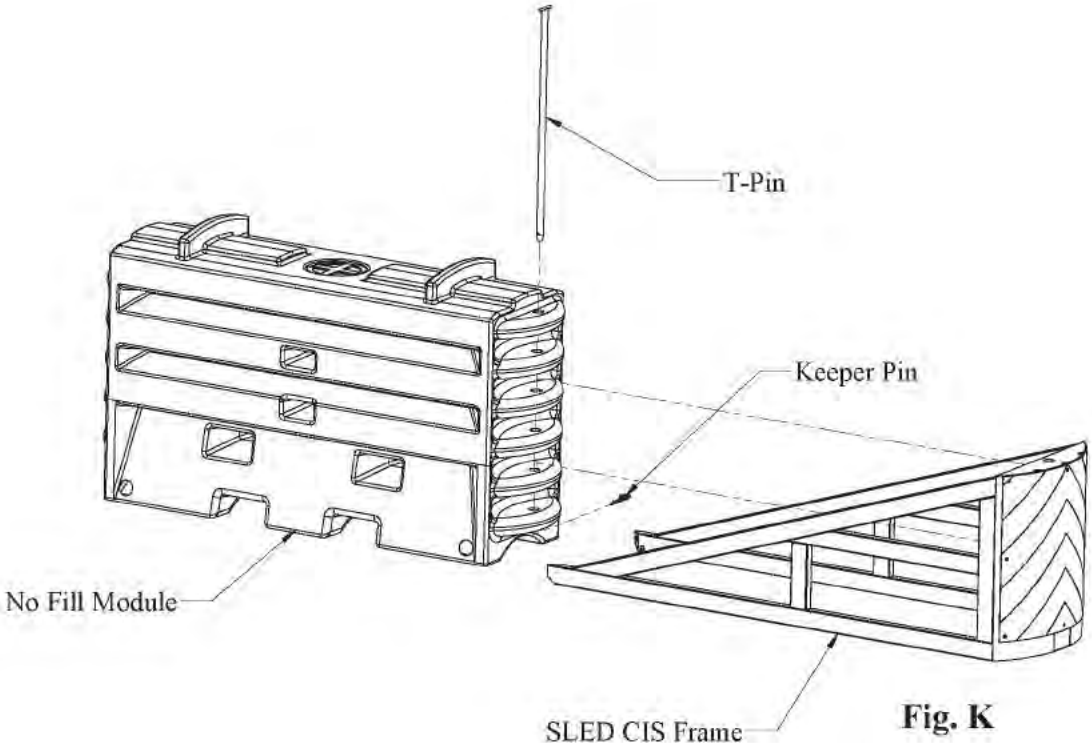

Fig. K

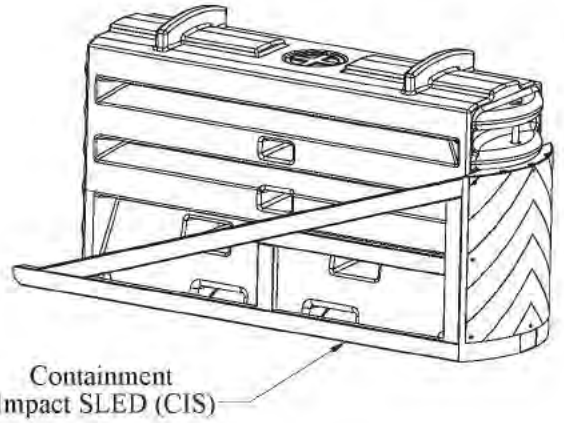

Step 10: (Continued)

Push the pre-assembled CIS up to the front most Yellow Water Filled Module. Determine that the Module knuckles will mate up (five (5) knuckle Module end to a six (6) knuckle Module end). If Module knuckles do not mate up, you will need to rotate the Yellow No Fill Module within the CIS. (Fig. L)

Step 11:

Push the pre-assembled CIS into the front most Yellow Water Filled Module so that the knuckles of each are positively interlocked and holes are aligned. Be sure to mate up a five (5) knuckle Module end with a six (6) knuckle Module end. ***Note:*** The SLED Frame's bottom plate will slide under the front most Yellow Water Filled Module by approximately four (4) inches with the tip of the SLED Frame flanking each side of the front most Yellow Water Filled Module. Insert the T-Pin from the top until the T-Pin contacts the ground. Secure the connection between Modules by inserting the Keeper Pin (R-Clip) through the small hole near the bottom of the T-Pin. (Fig. L)

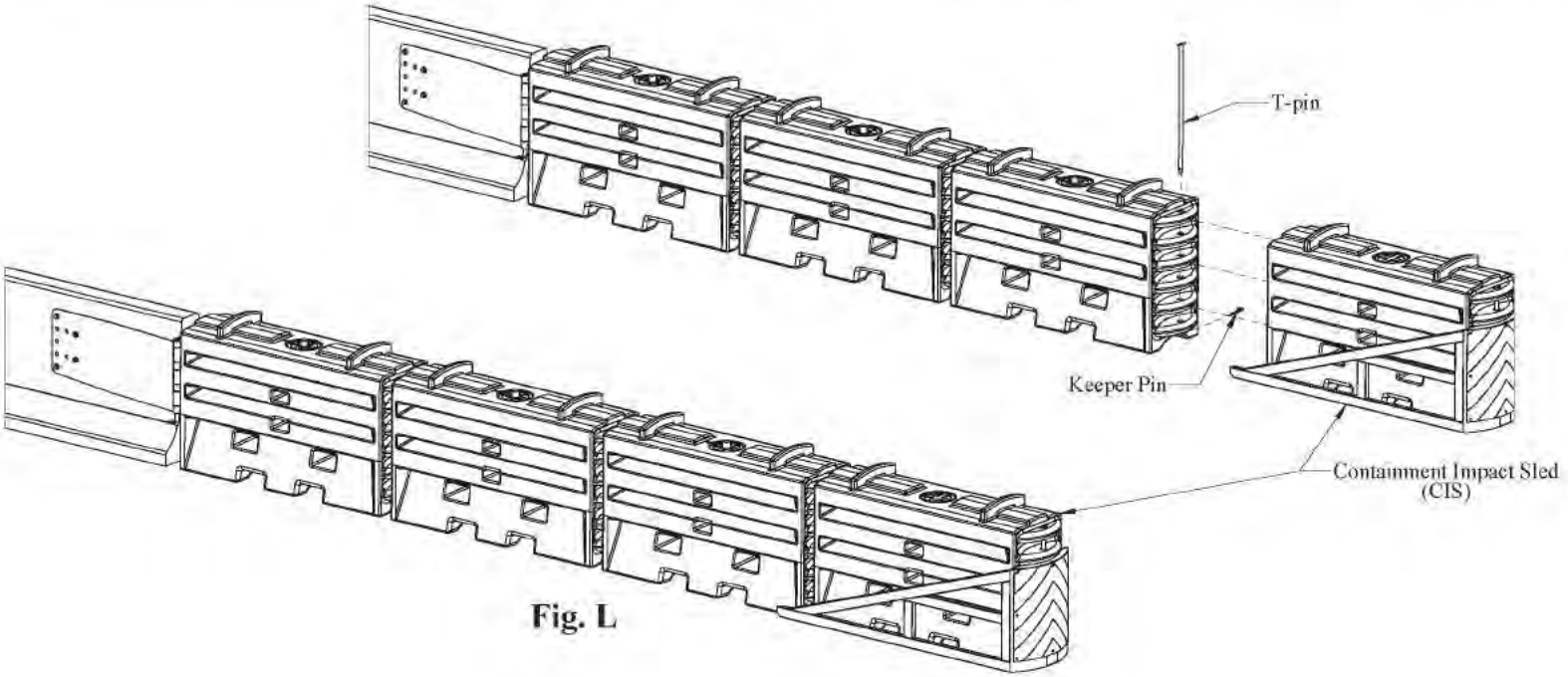

Fig. L

Step 12:

Double check the alignment of the Transition, the Water Filled Module(s) and the Containment Impact Sled (CIS) so that all are oriented correctly to the RE's requirements. Do this before filling with water.

Filling the SLED End Treatment with Water

Step 13:

Make sure that the Buttress Thread Drain Plug is installed and secure in each Yellow Water Filled Module to be used. Remove the "Drive By" Water Level Indicator Float Lid and fill the Yellow Water Filled Module(s) only with water or suitable non-freezing solution as described on page 16 of the SLED Installation, Maintenance, And Repair Manual. Replace the "Drive By" Water Level Indicator Float Lid. The module is full when the green float of the "Drive By" Water Level Indicator Float Lid is at the maximum height and fully extended. (Fig. M)

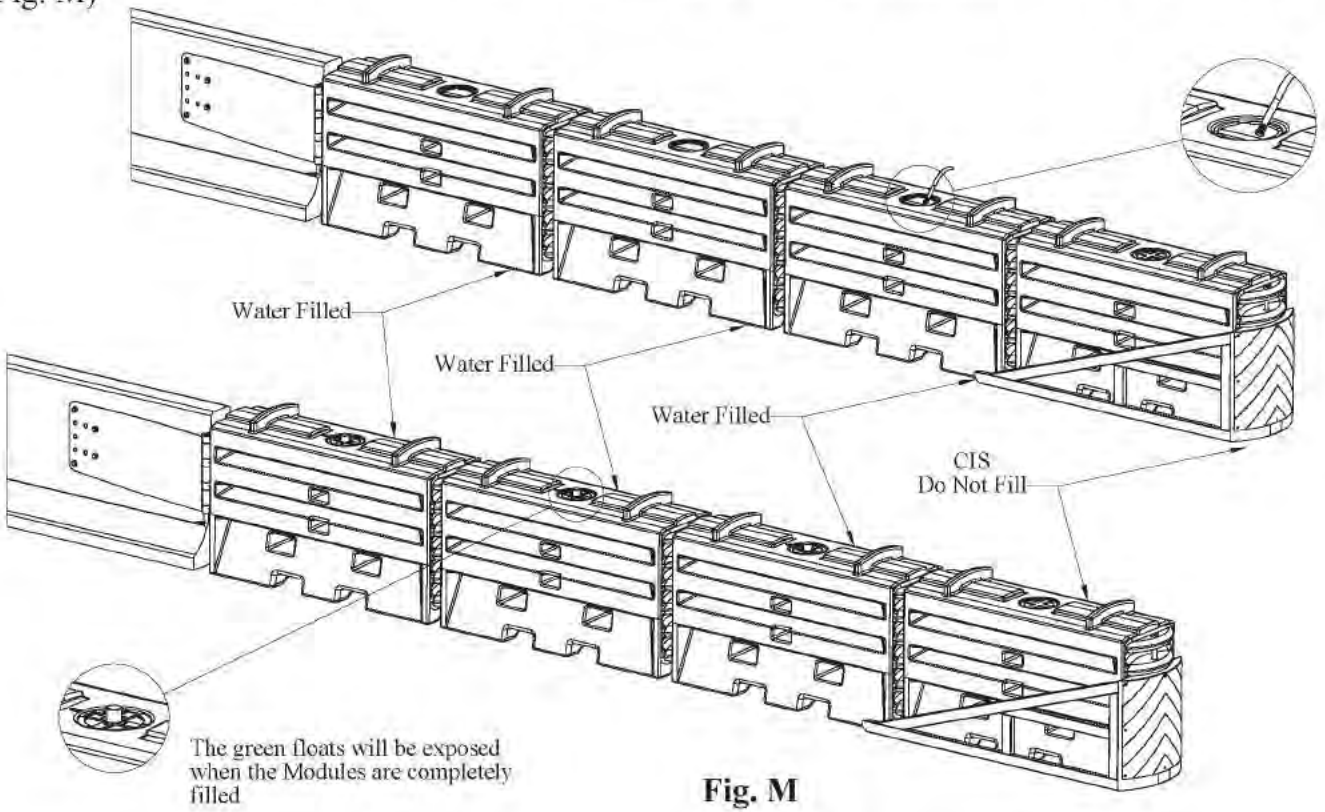

Fig. M

IMPORTANT:

The No Fill Module in the Containment Impact Sled (CIS) shall *NOT* be filled with water and is to remain empty *ALWAYS*. The No Fill Module of the CIS contains six (6) open drain holes at the bottom ((3) on each side) and is intentionally manufactured to not retain water. (Fig. N)

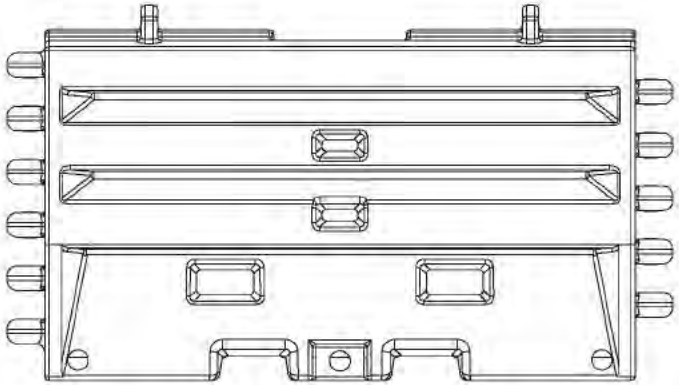

Fig. N

IMPORTANT:

DO NOT replace a Yellow No Fill Module with a Yellow Water Fill Module.
DO NOT replace a Yellow Water Filled Module with a Yellow No Fill Module.
DO NOT replace a Yellow SLEDModule with an Orange or White Sentry Water Cable Barrier Module.
Do so will alter the performance of the entire SLED End Treatment System.

Appendix A:

SLED End Treatment Specifications

160 Ave. La Pata
San Clemente, California 92673
(949) 361-5663
FAX (949) 361-9205
www.traffixdevices.com

TrafFix Devices Inc.
TrafFix SLED End Treatment
TL-3 General Specifications

I. General

The SLED End Treatment, components, and subassemblies shall be designed and manufactured by TrafFix Devices Inc. (TDI)
Corporate Office San Clemente, California
Manufacturing & Distribution Center, San Clemente, California

II. System Description

The SLED End Treatment is a TL-3 gating non-redirective crash cushion designed to meet crashworthy requirements of MASH. The SLED End Treatment System shall be used in permanent and portable installations.

The TrafFix SLED End Treatment shall be constructed from a series of individually linked modules. Each individual module shall consist of:

- Virgin high density polyethylene (HDPE) plastic shell, containing UV stabilizers and antioxidants molded to a triple faced profile of a ribbed saw tooth shape, designed to reduce penetration, vaulting, and under riding. Each full length saw tooth ribbed surface contains a flat surface to adhere a reflective sheeted section.

- Designed into each top surface shall be two stacking lugs which assemble into two recessed voids on the bottom surface. This feature locks the sections together vertically and prevents shifting during transport or when stored.

- The ends of each module shall be constructed with vertically aligned knuckles which interlock with those of adjacent module and accept a 1⅛ inch [28.58mm] diameter steel connecting T-pin. The T-pin is retained after installation by a keeper pin.

- Each module shall contain four internal molded-in corrosion resistant wire rope cables acting as a cable barrier when impacted. Each wire rope is connected to a corrosion resistant steel bushing which is molded into the knuckle sections and contains corrosion resistant surfaces and is of appropriate diameter to meet design speeds of TL-3 impacts.

- The approximate dimensions, weight, and volume of each module shall be: 22.5 in. [572 mm] width x 42 11/16 in. [1084 mm] height x 75 3/4 in [1924 mm] length (pin to pin). Empty weight 160 lbs [72.6 kg], weight filled 2000 lbs [907 kg], water ballast 220 gal [832 L].

- Modules shall be manufactured in yellow color.

- Each module shall be manufactured with fork lift openings to allow for lifting when empty or full.

- Each module shall be manufactured with one 8 in. [203.2 mm] diameter twist lock fill lid and a 2.25 in. [57.15 mm] diameter molded-in Buttress threaded drain hole with a plug to allow quick water ballast draining.

III. Performance Criteria

The SLED End Treatment shall be tested and pass all test requirements of MASH for Test Level 3 (TL-3) impact conditions for 1100 kg and 2270 kg [2420 lbs. and 5000 lbs.] vehicles at speeds of 100 km/h [62.1 mph].

The design, manufacturing process, and installation shall be identical between the MASH and NCHRP-350 tested products. Existing inventory is interchangeable as no design changes have been made since the inception of the SLED in February 2011.

The SLED test results shall demonstrate that a water filled gating non-redirective crash cushion shall safely decelerate the 1100C and 2270P impact vehicles and shall not exceed the maximum allowable occupant risk values.
Occupant impact velocity
Maximum allowable:12.2 m/s for occupant
Ride down acceleration
Maximum allowable: 20.49 G

Detached debris shall not show potential for penetrating the vehicle occupant compartment or present a hazard to other traffic, pedestrians, or workers in a work zone.

A vehicle impacting the TrafFix SLED End Treatment shall remain upright during and after the collision.

The impacting vehicle's intrusion into adjacent traffic lanes shall be minimized.

U.S. Department of Transportation
Federal Highway Administration

Appendix B:
FHWA Eligibility Letter CC-131

Use these links to locate the letter either

on the FHWA Website:

https://safety.fhwa.dot.gov/roadway_dept/countermeasures/reduce_crash_severity/barriers/pdf/cc131.pdf

Or the TrafFix Devices, Inc. Website:

https://www.traffixdevices.com/docs/attenuators/sled-us/traffix-sled-us_mash_cc-131.pdf

MOVING THE AMERICAN ECONOMY

Appendix C:

Regional Sales Managers, Key Contacts, & Customer Service

160 Ave. La Pata
San Clemente, California 92673
(949) 361-5663
FAX (949) 361-9205
www.traffixdevices.com

Regional Sales Managers

Northeast Territory Office
VA, WV, DL, MD, NJ, NY, PA, CT, MA, RI, NH, VT, ME, D.C.
Mike Herlehy
Rochester, NY
(585) 267-9970 office
(949) 573-9239 fax
mherlehy@traffixdevices.com

Southeast Territory Office
TN, NC, SC, GA, MS, AL, FL
Lary Hudoff
Miami, FL
(770) 778-8281 office
(949) 325-6059 fax
lhudoff@traffixdevices.com

Northwest Territory Office
MT, UT, ID, WA, OR, NV, CO, WY
Cary LeMonds
St. George, UT
(801) 979-7099 office
(949) 573-9290 fax
clemonds@traffixdevices.com

Midwest Territory Office
OH, MI, IN, KY, IL, WI, MN, ND, SD, IA, MO
Dave H. Lindquist
Chicago, IL
(630) 605-1273 office
(949) 573-9240 fax
dlindquist@traffixdevices.com

Western Territory Office
CA, HI, AK, AZ
Rob Snell
San Diego, CA
(949) 350-7048 office
(949) 573-9267 fax
rsnell@traffixdevices.com

Southwest Territory Office
TX, OK, KS, NE, NM, AR, LA
John Gense
Dallas, TX
(214) 704-1476 office
(949) 573-9291 fax
jgense@traffixdevices.com

VP International Sales & Marketing
Brent Kulp
San Clemente, CA
(949) 361-5663 office
(949) 573-9264 fax
bkulp@traffixdevices.com

To Place Orders

Email: orders@traffixdevices.com
Office: (949) 361-5663
Fax: (949) 573-9250

Key Contacts

Chris Giordano	Director of Business Development	cgiordano@traffixdevices.com	(216) 233-3273
Geoff Maus	V.P. Engineering	gmaus@traffixdevices.com	(949) 361-5663
Felipe Almanza	V.P. New Product Development	falmanza@traffixdevices.com	(949) 361-5663
Brent Kulp	V.P. Int'l Sales & Marketing	bkulp@traffixdevices.com	(949) 573-9214
Scott Ryan	V.P. North American Sales	sryan@traffixdevices.com	(949) 573-9216
Jim Marshall	V.P. Marketing	jmarshall@traffixdevices.com	(949) 361-5663

Customer Support Services

Jim Abercrombie	Manager, Customer Support	jabercrombie@traffixdevices.com	(949) 573-9217
Diane Womack	Customer Service Rep.	dwomack@traffixdevices.com	(949) 573-9237
Mark Wages	Customer Service Rep.	mwages@traffixdevices.com	(949) 573-9240
Terry Glogow	Customer Service Rep.	tglogow@traffixdevices.com	(949) 573-9246
Isabele Nascimento	Customer Service Rep.	inascimento@traffixdevices.com	(949) 573-9221
Salma Aranda	Customer Service Rep.	saranda@traffixdevices.com	(949) 573-9222

TrafFix Devices, Inc. Headquarters
160 Ave. La Pata, San Clemente, CA 92679 - (949) 361-5663 - Fax (949) 361-9250
www.traffixdevices.com

Notes

Notes



160 Ave. La Pata San Clemente, California 92673
(949) 361-5663 FAX (949) 361-9205
www.traffixdevices.com

Distributed By: